INSTALLER: LEAVE THIS MANUAL WITH THE APPLIANCE.
CONSUMER: RETAIN THIS MANUAL FOR FUTURE REFERENCE.
NEVER LEAVE CHILDREN OR OTHER AT RISK INDIVIDUALS ALONE WITH THE APPLIANCE.

NAPOLEON®
QUALITY FIREPLACES

INSTALLATION AND OPERATING INSTRUCTIONS

THIS FIREPLACE HAS BEEN TESTED AND LISTED BY INTERTEK TESTING SERVICES LTD. AS PER THE STANDARDS: ULC S610, UL 127 FOR FACTORY BUILT FIREPLACES.

HIGH COUNTRY™

NZ6000

SOLID FUEL BURNING ZERO CLEARANCE APPLIANCE

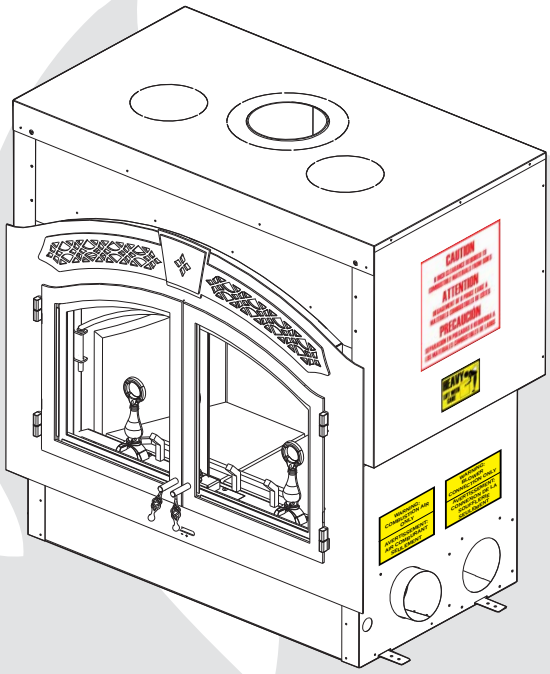

SAFETY INFORMATION

WARNING

If the information in these instructions are not followed exactly, a fire or explosion may result causing property damage, personal injury or death.
Please read entire manual before you install and use your heater.
This heater has not been tested with an unvented gas log set. To reduce risk of fire or injury, do not install an unvented gas log set into the heater.

- **This heater can be very hot when burning.**
- **Combustible materials such as firewood, wet clothing, etc. placed too close can catch fire.**
- **Children and pets must be kept from touching the heater when it is hot.**
- **The chimney must be sound and free of cracks. Before installing this unit, contact the local building or fire authority and follow their guidelines.**
- **Operate only with the doors tightly closed.**
- **Burn wood behind the log retainer directly on the firebricks.**
- **Do not use an elevated grate or otherwise raise the fire.**
- **This heater is designed to burn natural wood only. Higher efficiencies and lower emissions generally result when burning air dried seasoned hardwoods, as compared to softwoods or to green or freshly cut hardwoods.**
- **Do not start a fire with chemicals or fluids such as gasoline, engine oil, etc.**
- **Do not burn treated wood, coal, charcoal, coloured paper, cardboard, solvents or garbage.**
- **Do not let the heater become hot enough for any part to glow red.**

WARNING

HOT GLASS WILL CAUSE BURNS.

DO NOT TOUCH GLASS UNTIL COOLED.

NEVER ALLOW CHILDREN TO TOUCH GLASS.

HPBA Hearth, Patio & Barbecue Association

GO GREEN ECO-FRIENDLY TECHNOLOGY

Quality System Certified To ISO 9001-2008

ETL LISTED c US Intertek

APPLY SERIAL NUMBER LABEL FROM CARTON

Serial No. XXXXXX000000
MODEL NO.

Wolf Steel Ltd., 24 Napoleon Rd., Barrie, ON, L4M 0G8 Canada /
103 Miller Drive, Crittenden, Kentucky, USA, 41030
Phone (705)721-1212 • Fax (705)722-6031 • www.napoleonfireplaces.com • ask@napoleonproducts.com

TABLE OF CONTENTS

1.0	INSTALLATION OVERVIEW		3
2.0	**INTRODUCTION**		**4**
	2.1	DIMENSIONS	5
	2.2	GENERAL INSTRUCTIONS	5
	2.3	GENERAL INFORMATION	7
	2.3.1	FEATURES	7
	2.3.2	HEATING SPECIFICATIONS	7
	2.3.3	ELECTRICAL SPECIFICATIONS	7
	2.3.4	PACKING LIST	7
	2.3.5	EPA COMPLIANCE	7
	2.4	RATING PLATE INFORMATION	8
	2.5	HI-EFFICIENCY HEATING	9
3.0	**INSTALLATION PLANNING**		**10**
	3.1	LOCATION AND CLEARANCES	10
	3.1.1	VENTILATION OPENINGS	11
	3.2	OUTSIDE COMBUSTION AIR	11
	3.3	FLOOR PROTECTION	12
	3.3.1	EMBER STRIP AND HEARTH EXTENSIONS	12
	3.3.2	HEARTH EXTENSION	13
	3.3.3	HEARTH EXAMPLES	14
4.0	**INSTALLATION**		**15**
	4.1	CHIMNEY	15
	4.2	TYPICAL CHIMNEY INSTALLATION	16
	4.3	ADDING CHIMNEY SECTIONS	17
	4.4	OFFSET CHIMNEY INSTALLATION	18
	4.5	INSTALLING FLASHING AND STORM COLLAR	19
	4.6	CONNECTION TO A MASONRY CHIMNEY	19
	4.7	AIR COOLED CHIMNEY INSTALLATION	20
5.0	**FRAMING**		**21**
	5.1	WHEN USING A SOLID PACK CHIMNEY	22
	5.2	WHEN USING AN AIR COOLED CHIMNEY	22
	5.3	MINIMUM CLEARANCE TO COMBUSTIBLES	23
	5.4	MINIMUM ENCLOSURE CLEARANCES	23
	5.5	MINIMUM MANTEL CLEARANCES	24
6.0	**FINISHING**		**25**
	6.1	FACEPLATE	25
	6.2	UPPER GRILL INSTALLATION	25
	6.3	KEYSTONE INSTALLATION	26
	6.4	DOOR HANDLE INSTALLATION	26
	6.5	DOOR INSTALLATION	27
	6.6	DOOR HANDLE INSTALLATION	27
	6.7	CONTROL ROD AND HANDLE INSTALLATION	28
	6.8	SECONDARY AIR TUBE REMOVAL / INSTALLATION	28
	6.9	FIREBRICK AND BAFFLE INSTALLATION	29
	6.10	OPTIONAL NZ64 BLOWER INSTALLATION	30
	6.11	NZ150-KT KIT	32
	6.12	NSK6 OPTIONAL SCREEN KIT	32
	6.13	SMOKE SHELF	33
7.0	**SELECTING WOOD**		**34**
8.0	**OPERATION**		**35**
	8.1	OPERATING SOUNDS AND SMELLS	35
	8.2	DRAFT CONTROL	36
	8.3	FIRE EXTINGUISHERS AND SMOKE DETECTORS	37
	8.4	FUEL LOADING AND BURN CYCLE	37
	8.5	STARTING THE FIRE	38
	8.6	FLASH FIRES	40
	8.7	SMOKING	40
	8.8	OVERNIGHT BURN	40
	8.9	RELOADING THE APPLIANCE	40
9.0	**MAINTENANCE**		**41**
	9.1	ASH REMOVAL PROCEDURES	41
	9.2	CREOSOTE FORMATION AND REMOVAL	41
	9.3	RUN-AWAY OR CHIMNEY FIRE	42
	9.4	CHIMNEY CLEANING	42
	9.5	GLASS AND GASKET REPLACEMENT	43
	9.6	CARE OF GLASS	43
	9.7	NZ64 BLOWER REPLACEMENT	44
10.0	**REPLACEMENTS**		**45**
11.0	**TROUBLE SHOOTING GUIDE**		**47**
12.0	**WARRANTY**		**48**
13.0	**SERVICE HISTORY**		**49**

NOTE: Changes, other than editorial, are denoted by a vertical line in the margin.

1.0 INSTALLATION OVERVIEW

⚠ WARNING

THIS APPLIANCE AND ITS COMPONENTS ARE DESIGNED TO BE INSTALLED AND OPERATED AS A SYSTEM. ANY ALTERATION TO OR SUBSTITUTION FOR ITEMS IN THIS SYSTEM, UNLESS ALLOWED BY THESE INSTALLATION INSTRUCTIONS, WILL VOID THE ETL LISTING AND MAY VOID THE PRODUCT WARRANTY. IT MAY ALSO CREATE A HAZARDOUS INSTALLATION. READ THROUGH THESE INSTRUCTIONS THOROUGHLY BEFORE STARTING YOUR INSTALLATION AND FOLLOW THEM CAREFULLY THROUGHOUT YOUR PROJECT.

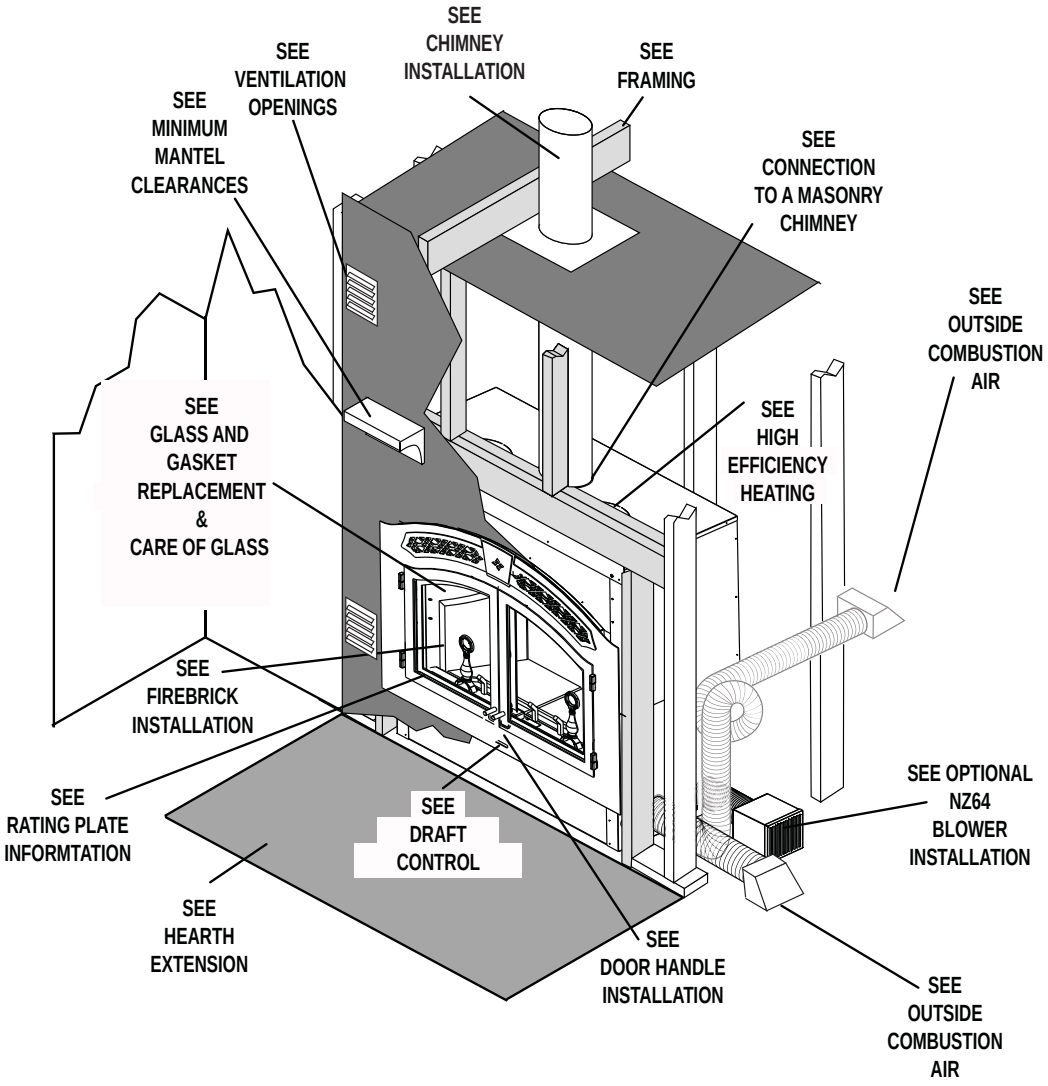

2.0 INTRODUCTION

⚠ WARNING

- **THIS APPLIANCE IS HOT WHEN OPERATED AND CAN CAUSE SEVERE BURNS IF CONTACTED.**
- **ANY CHANGES OR ALTERATIONS TO THIS APPLIANCE OR ITS CONTROLS CAN BE DANGEROUS AND IS PROHIBITED.**
- Do not operate appliance before reading and understanding operating instructions. Failure to operate appliance according to operating instructions could cause fire or injury.
- Before installing this appliance, contact the local building or fire authority and follow their guidelines.
- This appliance must be installed by a qualified installer.
- Risk of burns. The appliance should be turned off and cooled before servicing.
- Do not operate without fully assembling all components.
- Do not let the appliance become hot enough for any part to glow red.
- Do not install damaged, incomplete or substitute components.
- Risk of cuts and abrasions. Wear protective gloves and safety glasses during installation. Sheet metal edges may be sharp.
- Children and adults should be alerted to the hazards of high surface temperature and should stay away to avoid burns or clothing ignition.
- Young children should be carefully supervised when they are in the same room as the appliance. Toddlers, young children and others may be susceptible to accidental contact burns. A physical barrier is recommended if there are at risk individuals in the house. To restrict access to an appliance or stove, install an adjustable safety gate to keep toddlers, young children and other at risk individuals out of the room and away from hot surfaces.
- Clothing or other flammable material should not be placed on or near the appliance. Objects placed in front of the appliance must be kept a minimum of 48” away from the front face of the appliance.
- Due to high temperatures, the appliance should be located out of traffic and away from furniture and draperies.
- Ensure you have incorporated adequate safety measure to protect infants/toddlers from touching hot surfaces.
- Even after the appliance is out, the glass and/or screen will remain hot for an extended period of time.
- Check with your local hearth specialty dealer for safety screens and hearth guards to protect children from hot surfaces. These screens and guards must be fastened to the floor.
- Any safety screen or guard removed for servicing must be replaced prior to operating the appliance.
- Under no circumstances should this appliance be modified.
- This appliance must not be connected to a chimney flue pipe servicing a seperate solid fuel burning appliance.
- Do not operate the appliance with the glass door removed, cracked or broken. Replacement of the glass should be done by a licensed or qualified service person.
- Do not strike or slam shut the appliance glass door.
- Operate only with the doors tightly closed.
- Only doors / optional fronts certified with the unit are to be installed on the appliance.
- Keep the packaging material out of reach of children and dispose of the material in a safe manner. As with all plastic bags, these are not toys and should be kept away from children and infants.
- If the appliance is not properly installed, a house fire may result. Do not expose the appliance to the elements (ex. rain, etc.) and keep the appliance dry at all times. Wet insulation will produce an odour when the appliance is used.
- The chimney must be sound and free of cracks. Clean your chimney a minimum of twice a year and as required.
- Do not start a fire with chemicals or fluids such as gasoline, engine oil, etc.
- Your appliance requires periodic maintenance and cleaning. Failure to maintain your appliance may lead to smoke spillage in your home.
- Higher efficiencies and lower emissions generally result when burning air dried seasoned hardwoods, as compared to softwoods or too green or freshly cut hardwoods. Burning wet unseasoned wood can cause excessive creosote accumulation. When this is ignited it can cause a chimney fire that may result in a serious house fire.
- This appliance is designed to burn natural wood only. Do not burn treated wood, coal, charcoal, coloured paper, cardboard, solvents or garbage.
- Burn wood directly on the firebricks. Do not elevate grate or otherwise raise the fire.
- Do not store wood within appliance installation clearances or within the space required for re-fueling and ash removal.
- Ashes must be disposed in a metal container with a tight lid and placed on a non-combustible surface well away from the home or structure until completely cool.
- Ensure clearances to combustibles are maintained when building a mantel or shelves above the appliance. Elevated temperatures on the wall or in the air above the appliance can cause melting, discolouration or damage to decorations, a T.V. or other electronic components.

3.17C

2.1 DIMENSIONS

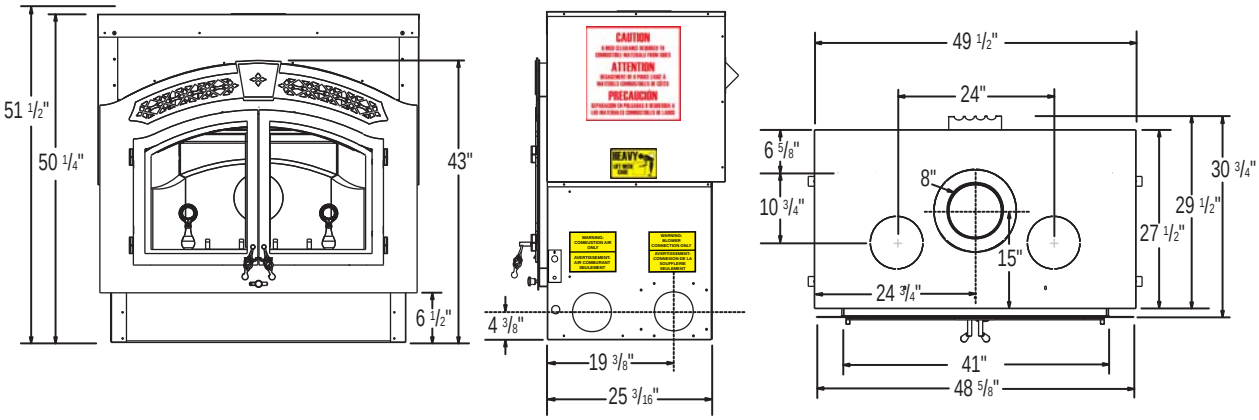

2.2 GENERAL INSTRUCTIONS

⚠ WARNING
BEFORE INSTALLING THIS APPLIANCE, CONTACT THE LOCAL BUILDING OR FIRE AUTHORITY AND FOLLOW THEIR GUIDELINES.
THIS APPLIANCE MUST BE INSTALLED BY A QUALIFIED INSTALLER. FOLLOW THE INSTALLATION DIRECTIONS. DO NOT OPERATE WITHOUT FULLY ASSEMBLING ALL COMPONENTS.
IF THIS APPLIANCE IS NOT PROPERLY INSTALLED, A HOUSE FIRE MAY RESULT.
DO NOT EXPOSE THE APPLIANCE TO THE ELEMENTS (EX. RAIN, ETC.) AND KEEP THE APPLIANCE DRY AT ALL TIMES. WET INSULATION WILL PRODUCE AN ODOUR WHEN THE APPLIANCE IS USED.
THIS APPLIANCE IS HOT WHEN OPERATED AND CAN CAUSE SEVERE BURNS IF CONTACTED. CHILDREN AND PETS MUST BE KEPT FROM TOUCHING THE APPLIANCE WHEN IT IS HOT. CONTACT YOUR LOCAL AUTHORIZED DEALER / DISTRIBUTOR FOR SAFETY SCREENS THAT MAY BE AVAILABLE FOR THIS PRODUCT.
COMBUSTIBLE MATERIAL SUCH AS FIREWOOD, WET CLOTHING, ETC. PLACED TOO CLOSE CAN CATCH FIRE. OBJECTS PLACED IN FRONT OF THE APPLIANCE MUST BE KEPT A MINIMUM OF 48" FROM THE FRONT OF THE APPLIANCE.
ALL WIRING SHOULD BE DONE BY A QUALIFIED ELECTRICIAN AND SHALL BE IN COMPLIANCE WITH LOCAL CODES AND WITH THE NATIONAL ELECTRIC CODE ANSI/NF NO. 70-CURRENT (IN THE UNITED STATES), OR WITH THE CURRENT CSA C22.1 CANADIAN ELECTRIC CODE (IN CANADA).

1. Combustion and dilution air is brought into the appliance through the fresh air intake collars located on the bottom front sides of the appliance.
2. The combustion air is brought into the firebox through many small holes in the airwash located at the top and sides of the opening.
3. The dilution air is introduced high in the firebox above the baffle to cool the chimney.
4. A single air control regulates the burn rate.
5. Inside the firebox combustion takes place and exhausts out the chimney.
6. The optional blower can be installed to draw fresh outside air into the home (not recommended in colder climates), then either the NZ150-KT kit or the NZ64 blower can be installed inside and will circulate the air into your home.

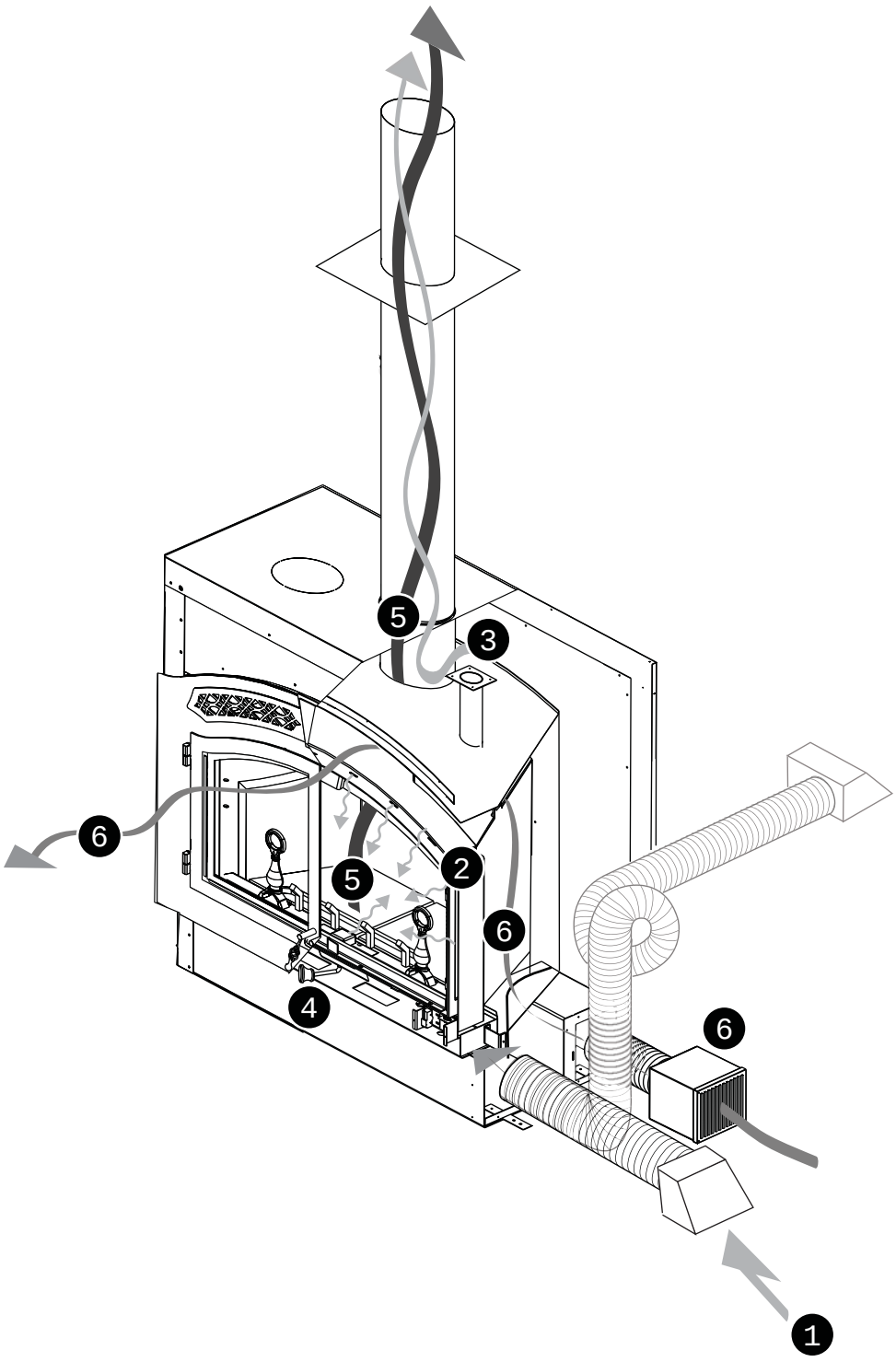

2.3 GENERAL INFORMATION

2.3.1 FEATURES

- Maximum log length of 32"
- Long burn time - up to 14 hours
- Optional 320 CFM blower for convection heat
- Thermostat for automatic control of the blower
- Large firebox capacity - 4.8 cu. ft.
- Large glass doors for maximum visibility
- Firebrick lining for firebox protection
- Outside air for combustion

2.3.2 HEATING SPECIFICATIONS

⚠ WARNING

DO NOT LET THE APPLIANCE BECOME HOT ENOUGH FOR ANY PART TO GLOW RED.

Approximate Heating Capacity up to 3,000 square feet (Will vary with the home's floor plan, insulation and outside temperature).
Maximum burning time up to 14 hours.
BTU Output per hour 10,000 to 80,000 (cord wood method).

2.3.3 ELECTRICAL SPECIFICATIONS

The blower on "HIGH" draws 2.2 amps on 120 volts A.C. (Approximately 250 watts).

2.3.4 PACKING LIST

Shipped with appliance:
Installation manual
Baffle
Ember Strip
Log Retainer
Flex duct w/ start collar 10' length, 6" diameter (1 for NZ150-KT or blower kit and 2 for outside combustion air supplies).

Shipped with faceplate:
Faceplate
12 faceplate screws

Shipped with the door(s):
Installation instructions and hardware

2.3.5 EPA COMPLIANCE

This appliance has been certified epa exempt.

CALIFORNIA PROP 65 WARNING:
Use of this product may produce smoke which contains chemicals known to the State of California to cause cancer, birth defects, or other reproductive harm.
Do not use makeshift compromises during installation.
Do not block or restrict air, grille or louvre openings! Do not add a hood.
Burning your appliance with the door open or ajar creates a fire hazard that may result in a house and/or chimney fire.
All venting connections must be in compliance with the chimney manufacturers installation instructions. Clearances referred to throughout this manual are the minimum requirements.

Your appliance must be installed in accordance with all national and local building code standards and the standard of Chimney and Appliances, Vents and Solid Fuel Burning Appliances NFPA #211. Consult the authority having jurisdiction (such as municipal building department, fire department, fire prevention bureau, etc.) to determine the need to obtain a permit. If you are in doubt about the proper installation for your situation, contact your dealer or local building or fire official. The manufacturer does not guarantee that this appliance and its options will completely heat your entire home.

Expansion / contraction noises during heating up and cooling down cycles are normal and to be expected.

It is recommended that in all cases, the appliance be secured to the floor. Use the pallet packing brackets to accomplish this.

NATIONAL FIREPLACE INSTITUTE NFI CERTIFIED www.nficertified.org

We suggest that our woodburning hearth products be installed and serviced by professionals who are certified in the U.S. by the National Fireplace Institute® (NFI) as NFI Woodburning Specialists or who are certified in Canada by Wood Energy Technical Training (WETT).

Wood Energy Technical Training www.wettinc.ca

2.4 RATING PLATE INFORMATION

Rating plate is located behind the appliance faceplate.

This illustration is for reference only. Refer to the rating plate on the appliance for accurate information.

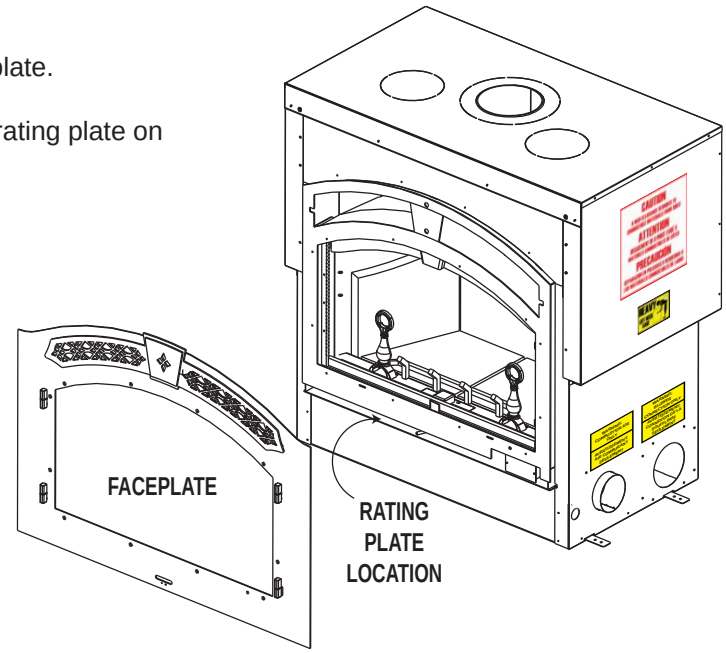

CERTIFIED TO / CERTIFIÉ SELON: ULC S610, UL-127

Intertek
- 9700539 (WSL)
- 4001657 (NGZ)
- 4001658 (NAC)
- 4001659 (WUSA)

Intertek
REFERENCE
#15528

SERIAL NO. NZ6000

HIGH COUNTRY

MODEL NO. NZ6000
N° DE MODÈLE NZ6000

LISTED FACTORY BUILT FIREPLACE
FOYER PRÉFABRIQUÉ HOMOLOGUÉ

INSTALL AND USE ONLY IN ACCORDANCE WITH THE MANUFACTURER'S INSTALLATION AND OWNER'S MANUAL. CONTACT LOCAL BUILDING OR FIRE OFFICIALS ABOUT RESTRICTIONS AND INSTALLATION INSPECTION IN YOUR AREA. DO NOT CONNECT THIS UNIT TO A CHIMNEY SERVING ANOTHER APPLIANCE.

POUR INSTALLATION ET UTILISATION CONFORMÉMENT AUX MANUEL D'INSTRUCTIONS DU FABRICANT. RENSEIGNEZ-VOUS AUPRÈS DES AUTORITÉS LOCALES DU BÂTIMENT OU DU SERVICE DES INCENDIES AU SUJET DES RESTRICTIONS ET DES INSPECTIONS D'INSTALLATION DANS VOTRE RÉGION. NE PAS RACCORDER À LA CHEMINÉE D'UN AUTRE APPAREIL.

MANUFACTURE DATE:
DATE DE FABRICATION:

☐ 2011 ☐ 2012 ☐ 2013 ☐ 2014

☐ Jan/Janv. ☐ Apr/Avr. ☐ Jul/Juill. ☐ Oct/Oct.
☐ Feb/Févr. ☐ May/Mai ☐ Aug/Août. ☐ Nov/Nov.
☐ Mar/Mars ☐ Jun/Juin ☐ Sep/Sept. ☐ Dec/Déc.

WARNING:
- Operate with feed doors closed. Open to feed fire only.
- Transport ashes in an air-tight non-combustible container.
- For use with cord wood only.
- Not for use in a Mobile Home.

AVERTISSEMENT :
- Tenir les portes fermées lorsque le foyer fonctionne. N'ouvrez que pour ravitailler le feu.
- Transporter les cendres dans un contenant incombustible possédant un couvercle étanche.
- Pour emploi avec du bois de corde seulement.
- Ne peut être installé dans une maison mobile.

OPTIONAL COMPONENTS / PIECES OPTIONNELS

BLOWER KIT / SOUFFLERIE :
NZ64
HOT AIR GRAVITY VENTS / VENTILATION PAR GRAVITE:
NZ221
ACCESSORIES PROVIDED BY MANUFACTURER ARE TO BE UTILIZED ONLY/ SEULS LES ACCESSOIRES FOURNIS PAR LE FABRICANT PEUVENT ÊTRE UTILISÉS.

WOLF STEEL LTD.
24 NAPOLEON ROAD. BARRIE, ONTRAIO L4M 0G8 CANADA

COMPONENTS REQUIRED FOR INSTALLATION:

SHIPPED WITH THE FIREPLACE:
INSTALLATION MANUAL
BAFFLE
EMBER STRIP
LOG RETAINER
FLEX DUCT W/ START COLLAR 10' LENGTH, 6" DIA (FOR BLOWER AND OUTSIDE AIR SUPPLY).

SHIPPED WITH FACEPLATE:
FACEPLATE
12 FACEPLATE SCREWS

SHIPPED WITH THE DOOR(S):
INSTALLATION INSTUCTIONS AND HARDWARE

CHIMNEY REQUIREMENTS (see installation manual);
Chimney must be certified to one of the following standards ULC S604, ULC S610 or ULC S629 for Canada or UL 103HT or UL-127 for the United States
Masonry chimney installation: Stainless steel liner must be certified to ULC S640 M92 or ULC 639 for Canada or UL 1777 for the United States
Air cooled chimney: Use only FMI 8DM

MINIMUM CHIMNEY HEIGHT	15 ft (4.57 m)	MAXIMUM NUMBER OF ELBOWS	4
MAXIMUM CHIMNEY HEIGHT	34 ft (10.36 m)	FLUE COLLAR	8"ø
MAXIMUM OFFSET ANGLE	30° US - 45° CANADA		

COMPOSANTS REQUIS POUR L'INSTALLATION:

LIVRÉ AVEC LE FOYER
MANUEL D'INSTRUCTIONS
DÉFLECTEUR
PARE-BRAISES
PARE-BÛCHES
GAINE FLEXIBLE AVEC COLLET DE RACCORD DE PRISE D'AIR DE 10' ⌀ DE DIAMÈTRE (POUR LA SOUFFLERIE ET L'APPROVISIONNEMENT EN AIR EXTÉRIEUR)

LIVRÉ AVEC LA FAÇADE :
FAÇADE
12 VIS POUR LA FAÇADE

LIVRÉ AVEC LA(LES PORTE(S) :
INSTRUCTIONS D'INSTALLATION ET QUINCAILLERIE

EXIGENCES POUR LA CHEMINÉE (voir le manuel d'instructions)
La cheminée doit être certifiée selon l'une des normes suivantes : ULC S610 ou ULC S629 pour le Canada ou selon les normes UL 103HT ou UC-127 pour les États-Unis
Installation dans une cheminée en maçonnerie : La gaine en acier inoxydable doit être certifiée selon les normes ULC S640 M92 ou ULC 639 pour le Canada ou selon la norme UL 1777 pour les États-Unis
Cheminée refroidie à l'air : Utilisez seulement FMI 8DM

HAUTEUR MINIMALE DE LA CHEMINÉE	15 pi (4.57 m)	NOMBRE MAXIMAL DE COUDES	4
HAUTEUR MAXIMALE DE LA CHEMINÉE	34 pi (10.36 m)	BUSE D'EVACUATION	8"ø
ANGLE DE DÉVIATION MAXIMAL	30° US - 45° CANADA		

PREVENT CREOSOTE FIRE: INSPECT CHIMNEY AND CHIMNEY CONNECTOR, IF APPLICABLE, TWICE MONTHLY AND CLEAN IF NECESSARY.
DO NOT OVERFIRE: IF EXTERIOR OF UNIT GLOWS RED, YOU ARE OVERFIRING. KEEP FURNISHINGS AND OTHER COMBUSTIBLE MATERIALS A CONSIDERABLE DISTANCE AWAY FROM APPLIANCE.
TYPE OF FUEL: WOOD ONLY.

PRÉVENIR LES FEUX DE CRÉOSOTE: INSPECTEZ LA CHEMINÉE OU LE RACCORD DE CHEMINÉE, SI APPLICABLE, DEUX FOIS PAR MOIS ET NETTOYEZ SI NECESSAIRE.
NE SURCHAUFFEZ PAS. SI L'EXTERIEUR DE L'UNITÉ DEVIENT ROUGE, VOUS SURCHAUFFEZ.
GARDEZ LES MEUBLES ET AUTRES MATÉRIELS COMBUSTIBLES A UNE DISTANCE CONSIDERABLE DE L'APPAREIL DE CHAUFFAGE.
TYPE DE COMBUSTIBLE: BOIS SEULEMENT.

IMPORTANT
BEFORE COMMENCING INSTALLATION REFER TO THE LABEL LOCATED BEHIND THE FACEPLATE AND TO THE MANUFACTURER'S INSTALLATION INSTRUCTIONS PACKAGED TOGETHER WITH THIS UNIT.
THE INSTALLATION MUST BE APPROVED BY THE AUTHORITY HAVING JURISDICTION.
AVANT DE COMMENCER L'INSTALLATION, REFEREZ-VOUS À L'ÉTIQUETTE QUI SE TROUVE DERRIÈRE LA FAÇADE AINSI QU'AUX INSTRUCTIONS D'INSTALLATION DU MANUFACTURIER FOURNIES AVEC L'UNITÉ.
L'INSTALLATION DOIT ÊTRE APPROUVÉE PAR L'AUTORITÉ COMPÉTENTE.

W385-0293 / G

THIS HEATER HAS BEEN CERTIFIED EPA EXEMPT. DO NOT REMOVE THIS LABEL

INSULATED CHIMNEY MINIMUM CLEARANCES TO COMBUSTIBLES:

BACK	0"(0 mm)	TO STAND-OFFS
HEADER	96"(2.44 m)	FROM BASE OF UNIT
CHIMNEY	2"(51 mm)	REFER TO MANUFACTURER'S INSTALLATION INSTRUCTIONS.
MANTEL	12"(305 mm)	TO TOPEDGE OF FACEPLATE
TOP FACING	96"(2.44 m)	FROM BASE OF UNIT
SIDE FACING	6"(153 mm)	FROM SIDE OF UNIT
ADJACENT SIDEWALL	21"(534 mm)	TO EDGE OF FACEPLATE
HEARTH PROTECTION	21"(534 mm)	FROM FRONT OF UNIT
HEARTH PROTECTION	8"(203 mm)	FROM SIDES OF UNIT
*TOP OF UNIT (ENCLOSURE CEILING)	120"(3.05 m)	FROM BASE OF UNIT

***FOR FURTHER INFORMATION SEE THE MANUFACTURER'S INSTALLATION AND OPERATING MANUAL.**

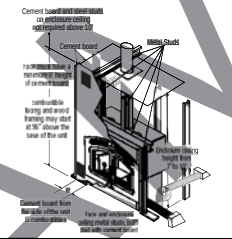

CET APPAREIL DE CHAUFFAGE EST TESTÉ EPA ET EXEMPT. NE RETIREZ PAS CETTE PLAQUE

DÉGAGEMENTS MINIMAUX DE LA CHEMINÉE PRÉFABRIQUÉE STANDARD AUX MATÉRIAUX COMBUSTIBLES

ARRIÈRE	0"(0 mm)	AUX ESPACEURS
LINTEAU	96"(2.44 m)	DE LA BASE DE L'APPAREIL
CHEMINÉE	2"(51 mm)	RÉFÉREZ-VOUS AU MANUEL D'INSTRUCTIONS DU FABRICANT.
TABLETTE	12"(305 mm)	DU HAUT DE LA FAÇADE
DESSUS	96"(2.44 m)	DE LA BASE DE L'APPAREIL
CÔTÉ	6"(153 mm)	DU CÔTÉ DE L'APPAREIL
MUR LATÉRAL ADJACENT	21"(534 mm)	DU BORD DE LA FAÇADE
PROTECTION DE PLANCHER	21"(534 mm)	DU DEVANT DU FOYER
PROTECTION DE PLANCHER	8"(203 mm)	DES CÔTÉS DU FOYER
*HAUT DE L'APPAREIL (PLAFOND DE L'ENCLAVE)	120"(3.05 m)	DE LA BASE DE L'APPAREIL

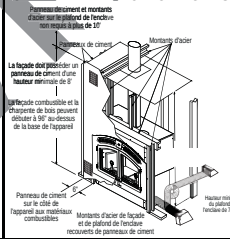

*POUR PLUS D'INFORMATIONS, CONSULTEZ LE MANUEL D'INSTRUCTIONS DU FABRICANT.

AIR COOLED CHIMNEY MINIMUM CLEARANCES TO COMBUSTIBLES:

BACK	0"(0 mm)	TO STAND-OFFS
HEADER	72"(2.83 m)	FROM BASE OF UNIT
CHIMNEY	2"(51 mm)	REFER TO MANUFACTURER'S INSTALLATION INSTRUCTIONS.
MANTEL	12"(305 mm)	TO TOPEDGE OF FACEPLATE
TOP FACING	84"(3.31 m)	FROM BASE OF UNIT
SIDE FACING	6"(153 mm)	FROM SIDE OF UNIT
ADJACENT SIDEWALL	21"(534 mm)	TO EDGE OF FACEPLATE
HEARTH PROTECTION	21"(534 mm)	FROM FRONT OF UNIT
HEARTH PROTECTION	8"(203 mm)	FROM SIDES OF UNIT
*TOP OF UNIT (ENCLOSURE CEILING)	84"(3.31 m)	FROM BASE OF UNIT

*FOR FURTHER INFORMATION SEE THE MANUFACTURER'S INSTALLATION AND OPERATING MANUAL.

CHIMNEY REQUIREMENTS
STARTER COLLAR NZAC-KT MUST BE USED IN CONJUNCTION WITH FMI 8DM AIR COOLED CHIMNEY

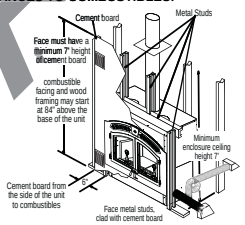

DÉGAGEMENTS MINIMAUX DE LA CHEMINÉE REFROIDIE À L'AIR AUX MATÉRIAUX COMBUSTIBLES

ARRIÈRE	0"(0 mm)	AUX ESPACEURS
LINTEAU	72"(2.83 m)	DE LA BASE DE L'APPAREIL
CHEMINÉE	2"(51 mm)	RÉFÉREZ-VOUS AU MANUEL D'INSTRUCTIONS DU FABRICANT.
TABLETTE	12"(305 mm)	DU HAUT DE LA FAÇADE
DESSUS	84"(3.31 m)	DE LA BASE DE L'APPAREIL
CÔTÉ	6"(153 mm)	DU CÔTÉ DE L'APPAREIL
MUR LATÉRAL ADJACENT	21"(534 mm)	DU BORD DE LA FAÇADE
PROTECTION DE PLANCHER	21"(534 mm)	DU DEVANT DU FOYER
PROTECTION DE PLANCHER	8"(203 mm)	DES CÔTÉS DU FOYER
*HAUT DE L'APPAREIL (PLAFOND DE L'ENCLAVE)	84"(3.31 m)	DE LA BASE DE L'APPAREIL

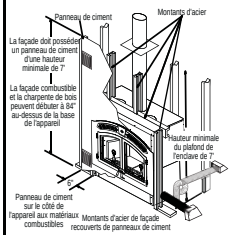

*POUR PLUS D'INFORMATIONS, CONSULTEZ LE MANUEL D'INSTRUCTIONS DU FABRICANT.

SPÉCIFICATIONS POUR LA CHEMINÉE
LE COLLET DE DÉPART NZAC-KT DOIT ÊTRE UTILISÉ CONJOINTEMENT AVEC LA CHEMINÉE REFROIDIE À L'AIR FMI 8DM

SAMPLE

NOTE: The rating plate must remain with the appliance at all times. It must not be removed.

2.5 HI-EFFICIENCY HEATING

A HOT AIR GRAVITY VENT SYSTEM (NZ221) may be used to distribute heat to an adjoining room (located either above, or beside the room containing the appliance) by way of vents. Air flow through this vent must be experimented with and the dampers of the grill adjusted manually to suit your requirements. This may take a few attempts; thereafter adjustments should no longer be required as is normally experienced with your central heating system registers.

The hot air vent must be installed in an upward direction! NEVER install in a downward direction. The hot air gravity vent system is not to be connected to a central heating system.

No more than two hot air gravity vents may be connected to the appliance. Individual vent runs are not to exceed 10 feet.

All hot air gravity vents must be insulated.

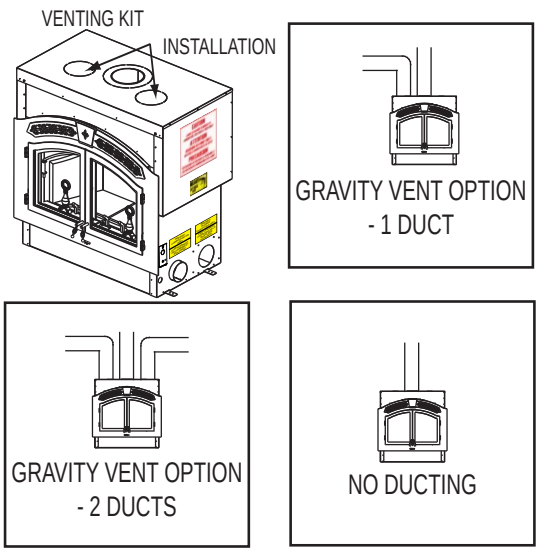

3.0 INSTALLATION PLANNING

⚠ WARNING
WEAR GLOVES AND SAFETY GLASSES FOR PROTECTION.
CAREFULLY FOLLOW THE INSTRUCTIONS FOR ASSEMBLY OF THE PIPE AND OTHER PARTS NEEDED TO INSTALL THE APPLIANCE. FAILURE TO DO SO MAY RESULT IN A FIRE, ESPECIALLY IF COMBUSTIBLES ARE TOO CLOSE TO THE APPLIANCE OR CHIMNEY AND AIR SPACES ARE BLOCKED, PREVENTING THE FREE MOVEMENT OF COOLING AIR.
DO NOT DRAW OUTSIDE AIR FROM GARAGE SPACES. EXHAUST PRODUCTS OF GASOLINE ENGINES ARE HAZARDOUS. DO NOT INSTALL OUTSIDE AIR DUCTS SUCH THAT THE AIR MAY BE DRAWN FROM ATTIC SPACES, BASEMENTS OR ABOVE THE ROOFING WHERE OTHER HEATING APPLIANCES OR FANS AND CHIMNEYS EXHAUST OR UTILIZE AIR. THESE PRECAUTIONS WILL REDUCE THE POSSIBILITY OF APPLIANCE SMOKING OR AIR FLOW REVERSAL. THE OUTSIDE AIR INLET MUST REMAIN CLEAR OF LEAVES, DEBRIS ICE AND/OR SNOW. IT MUST BE UNRESTRICTED WHILE APPLIANCE IS IN USE TO PREVENT ROOM AIR STARVATION WHICH CAN CAUSE SMOKE SPILLAGE AND AN INABILITY TO MAINTAIN A FIRE. SMOKE SPILLAGE CAN ALSO SET OFF SMOKE ALARMS.
NEGATIVE PRESSURE WITHIN YOUR HOME MAY INADVERTENTLY AFFECT YOUR APPLIANCE.
TO PREVENT CONTACT WITH SAGGING OR LOOSE INSULATION, THE APPLIANCE MUST NOT BE INSTALLED AGAINST VAPOUR BARRIERS OR EXPOSED INSULATION. LOCALIZED OVERHEATING COULD OCCUR AND A FIRE COULD RESULT.
DO NOT USE MAKESHIFT COMPROMISES DURING INSTALLATION. DO NOT BLOCK OR RESTRICT AIR, GRILLE OR LOUVRE OPENINGS. DO NOT ADD A HOOD.
KEEP HAND TOOLS IN GOOD CONDITION, SHARPEN CUTTING EDGES AND MAKE SURE TOOL HANDLES ARE SECURE.
ALWAYS MAINTAIN THE MINIMUM AIR SPACE REQUIRED TO THE ENCLOSURE TO PREVENT FIRES.

68.3A

3.1 LOCATION AND CLEARANCES

⚠ WARNING

DO NOT INSTALL INTO ANY AREA HAVING A HEIGHT LESS THAN 7 FEET (CEILING OF ENCLOSURE TO APPLIANCE BOTTOM, EXCLUDING HEARTH HEIGHT).

The appliance is shipped with a set-up face that is 1/8" larger on the top, bottom and each side than the faceplate. Leave the set-up face in place to act as a template when installing the finishing face.

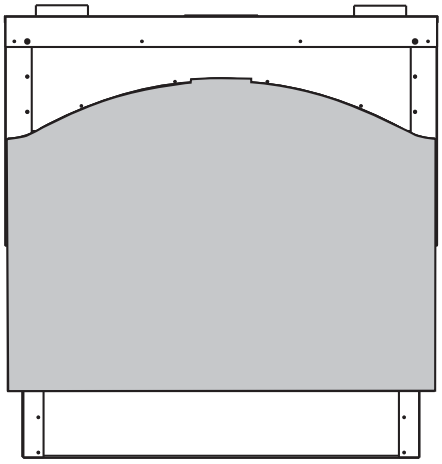

IMPORTANT

This appliance, fully dressed, weighs 850 lbs (385.6kg). Ensure there is adequate floor support for the appliance, chimney and facing material. Some material could weigh thousands of pounds.

We recommend that the appliance be secured to the floor in all cases.

Using the door opening as a datum, level the appliance by shimming underneath the appliance. Remove and discard the lifting handles. Bend the tabs down and secure the appliance to the floor.

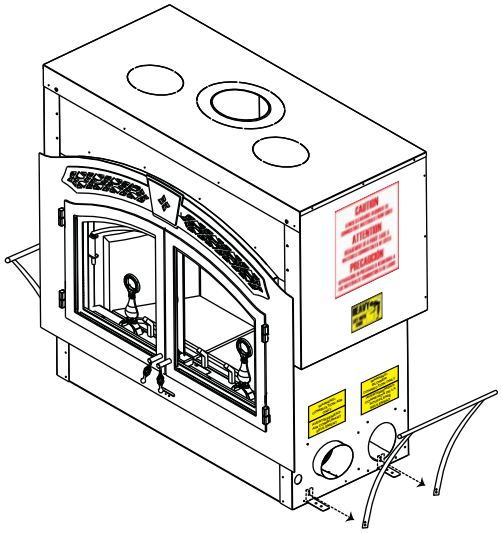

3.1.1 VENTILATION OPENINGS

The appliance enclosure must be provided with sufficient air circulation to avoid a fire hazard. Install ventilation grilles (minimum openings of 40 sq. inches) at both floor and ceiling levels of the enclosure. These grilles must not restrict the flow of heat by more than 25%. Do not install into any area having a height less than 7 feet (ceiling of enclosure to appliance bottom, excluding hearth height). The location of windows, doors and the traffic flow in the room where the stove is to be located should be considered. If possible, you should choose a location where the chimney will pass through the house without cutting a floor or roof joist.

3.2 OUTSIDE COMBUSTION AIR

<u>NOTE:</u> Incorporate a vertical loop or trap into air liners to reduce air flow when appliance is not in use.

Insulating the intake liners is recommended in colder climates to prevent condensation from occurring.

The Napoleon Model NZ6000 takes outside air directly into the appliance through the openings in the left and right hand sides.

Decide on the most convenient location for the fresh air inlet ducts and hoods which may be installed above or below floor level.

The fresh air inlet ducts and hoods must be installed. Secure and seal the intake liners to the collars using 3 sheet metal screws, and high temperature sealant.

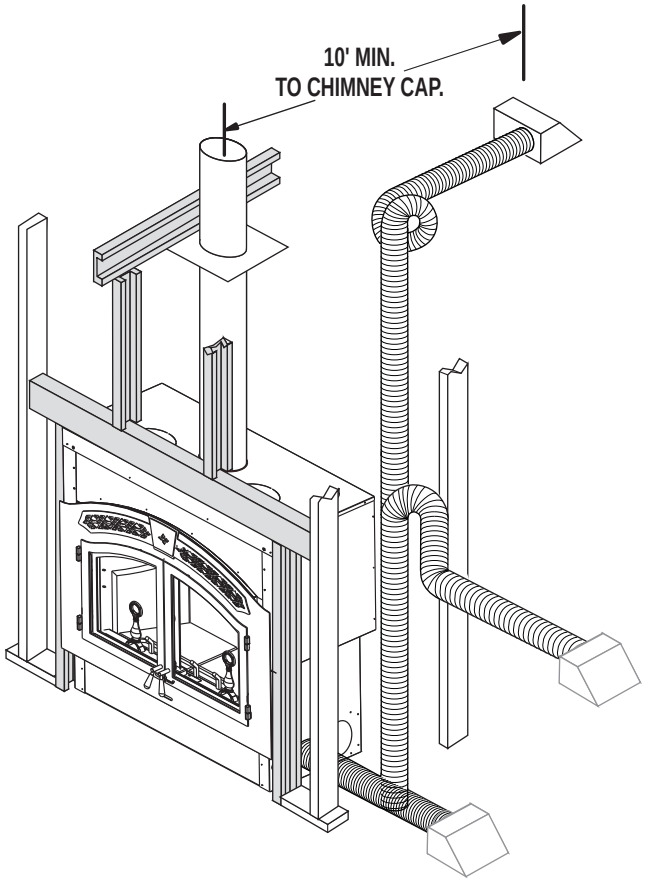

Vertical rise is between:	Horizontal run may be:
6' & 10' max	5'
3' & 6'	15'
1' & 3'	20'
0' & 1'	25'

AIR INTAKE LINERS

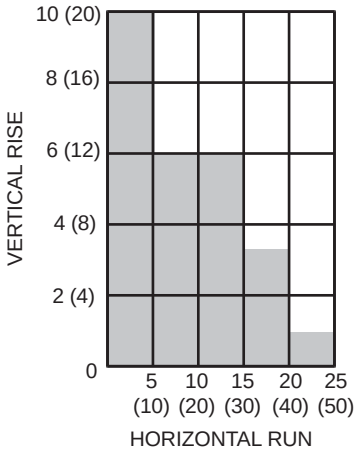

Included with the appliance are:

- Two 10' lengths of vent. Use a connector and seal if adding more length.
- Two of intake hoods.

The vertical height of the air intake liner must not be greater than 2/3 the height of the chimney. If additional liner length is required, it may be doubled by increasing the size from 6" diameter to 8" diameter. Use a 6" to 8" increaser at the hood and a decreaser at the appliance. Values in brackets represent 8" diameter intake liners.

The duct terminations must be located so they can not be blocked (i.e. snowdrifts). 4' above grade is recommended. Make a 6 ½" inch hole to suit in an outside wall of the house. From outside, place the fresh air hood into the hole, open side down. Seal with caulking and secure.

3.3 FLOOR PROTECTION

3.3.1 EMBER STRIP AND HEARTH EXTENSIONS

⚠ WARNING

HEARTH EXTENSIONS ARE TO BE INSTALLED ONLY AS DESCRIBED TO PREVENT HIGH TEMPERATURES FROM OCCURRING ON CONCEALED COMBUSTIBLE MATERIALS. HEARTH EMBER STRIPS PREVENT BURNING OR HOT PARTICLES FROM INADVERTENTLY FALLING DIRECTLY ON COMBUSTIBLE SURFACES IN THE EVENT THE BUILDING SHOULD SETTLE AND DISTURB THE ORIGINAL CONSTRUCTION.

An acceptable 61½" x 20" non-combustible (ie: brick, stone or ceramic tile) hearth extension must be installed. Hearth must extend 20" in front of the faceplate when it is not elevated (see local building codes). Hearth must extend a minimum of 6" to both sides of the appliance (61 ½").

The hearth must extend a minimum 20" in front of the appliance although if raised a minimum of 6 1/2" the 20" may be reduced to a minimum of 18".

The hearth must extend a minimum of 6" to both sides of the appliance (61 ½").

The hearth must be a minimum of 1" thick cement board (or equivalent) plus ¼" ceramic tile.

Ensure that the gap between the appliance and a non-combustible hearth extension is sealed with sand/cement grout or covered with an ember strip (or both) to prevent sparks and embers from falling into this area.

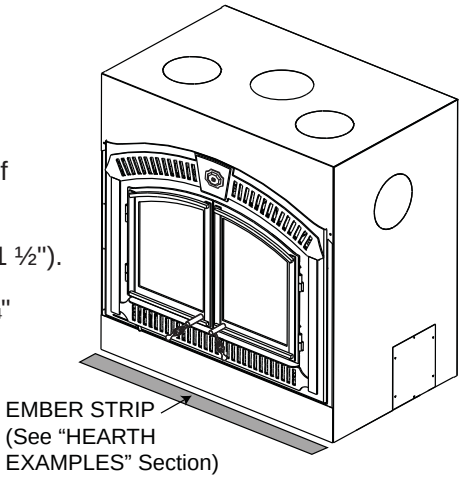

Raised hearths must be constructed of non-combustible materials such as cement blocks or bricks.

While the appliance can be installed directly on the floor, a non-combustible hearth extension is required in front of the appliance, that must not be built higher than the bottom of the appliance faceplate. It may therefore be advisable to build the appliance on a raised platform.

A raised hearth together with the appliance built on a raised platform is recommended for easier wood loading and fire viewing.

3.3.2 HEARTH EXTENSION

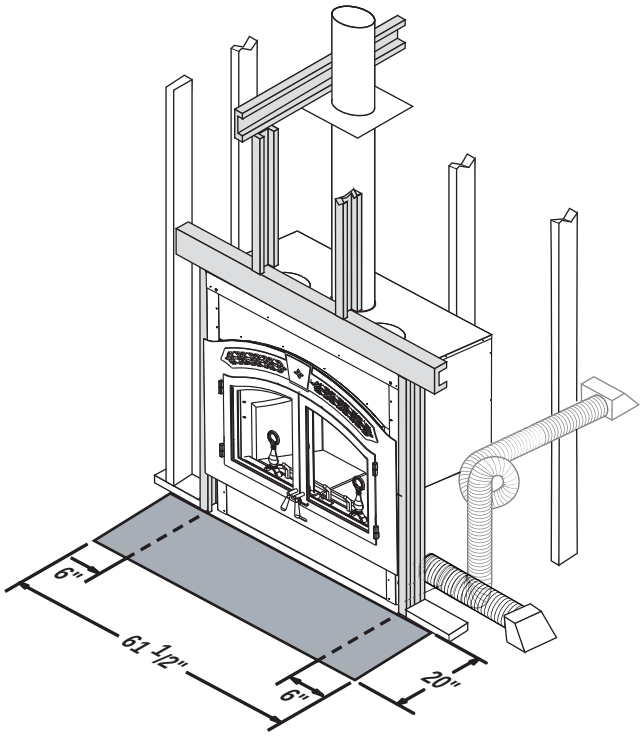

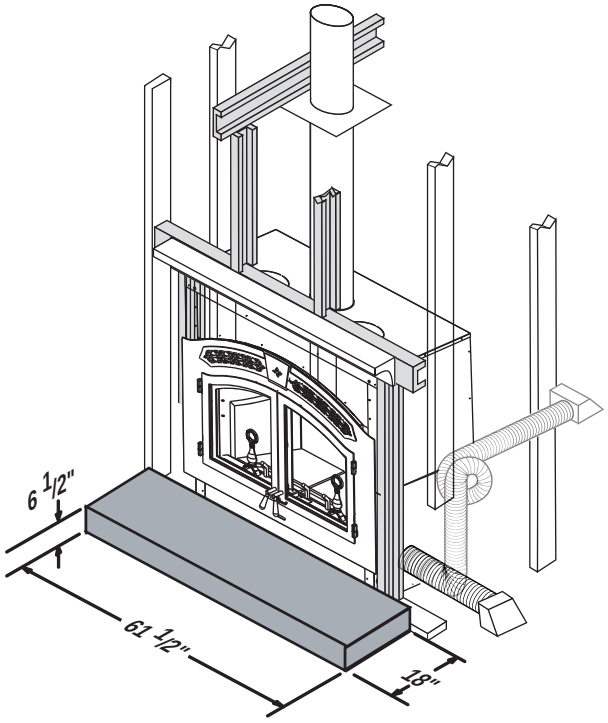

An acceptable 61½" x 20" non-combustible (ie: brick, stone or ceramic tile) hearth extension must be installed. Hearth must extend 20" in front of the faceplate when it is not elevated (see local building codes). Hearth must extend a minimum of 6" to both sides of the appliance (61 ½").

Hearth must be a minimum of 1" thick cement board (or equivalent) plus ¼" ceramic tile.

Ensure that the gap between the appliance and a combustible hearth extension is sealed with sand/cement grout or covered with a metal strip (or both) to prevent sparks and embers from falling into this area.

SEE HEARTH EXAMPLES

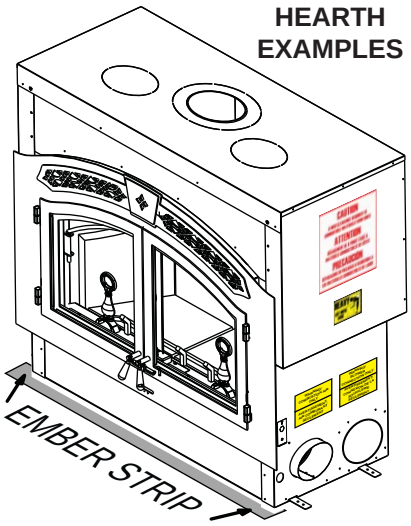

HEARTH EXTENSION

Elevated hearths must be constructed of noncombustible materials such as cement blocks or bricks.

While the appliance can be installed directly on the floor, a non-combustible hearth extension is required in front of the appliance, that must not be built higher than the bottom of the appliance faceplate. It may therefore be advisable to build the appliance on a raised platform.
Hearths raised minimum 6 ½" must extend a minimum of 18".

3.3.3 HEARTH EXAMPLES

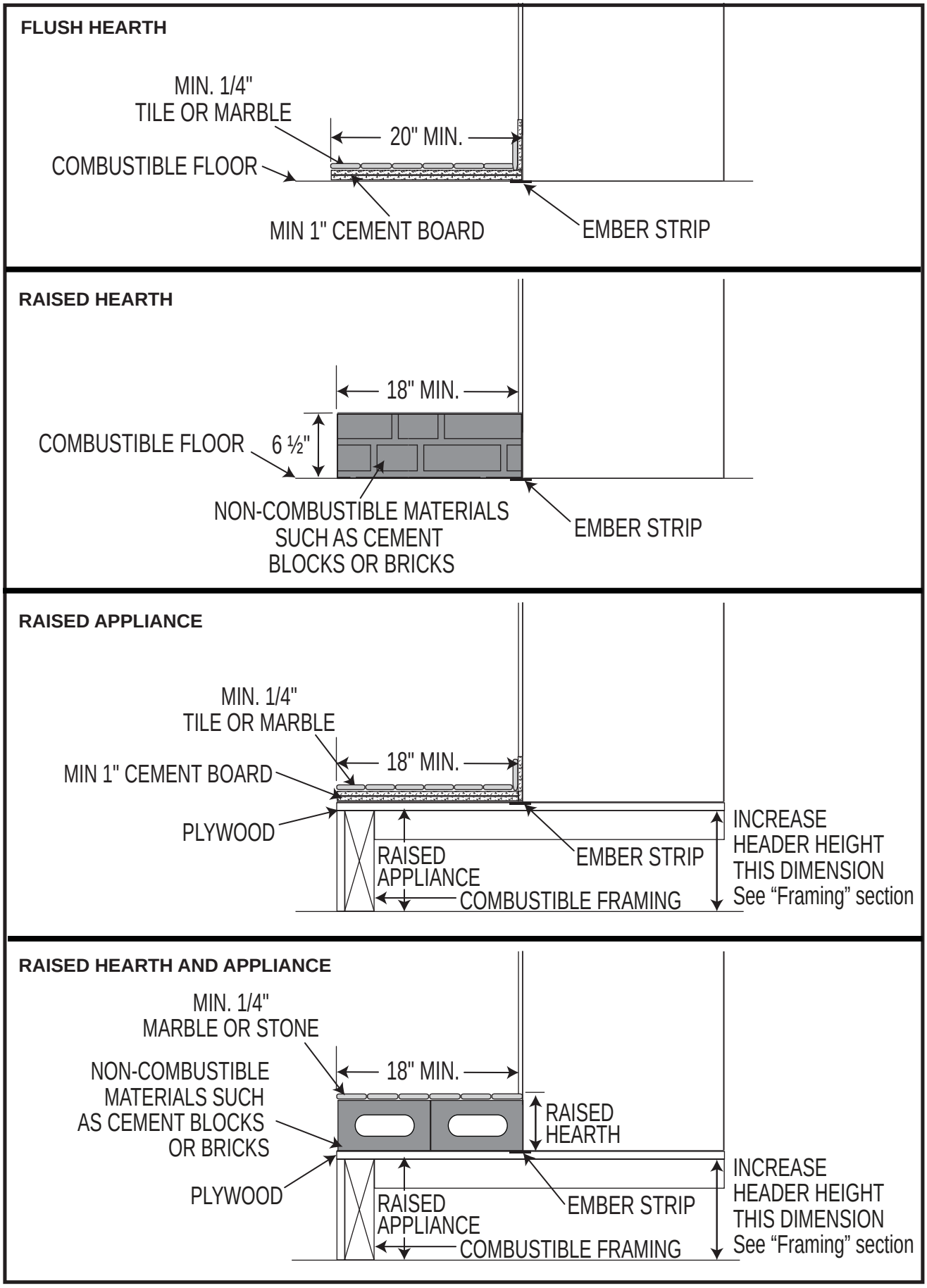

4.0 INSTALLATION

⚠ WARNING

NEVER INSTALL A SINGLE WALL SLIP SECTION OR SMOKE PIPE IN A CHASE STRUCTURE. THE HIGHER TEMPERATURE OF THIS SINGLE WALL PIPE MAY RADIATE SUFFICIENT HEAT TO COMBUSTIBLE CHASE MATERIALS TO CAUSE A FIRE.

TO AVOID DANGER OF FIRE, ALL INSTRUCTIONS MUST BE STRICTLY FOLLOWED, INCLUDING THE PROVISION OF AIR SPACE CLEARANCE BETWEEN CHIMNEY SYSTEM AND ENCLOSURE. TO PROTECT AGAINST THE EFFECTS OF CORROSION ON THOSE PARTS EXPOSED TO THE WEATHER, WE RECOMMEND THAT THE CHASE TOP BE PAINTED WITH A RUST-RESISTANT PAINT.

MAINTAIN A MINIMUM 2" AIR CLEARANCE TO ALL PARTS OF THE CHIMNEY SYSTEM AT ALL TIMES. FAILURE TO MAINTAIN THIS 2" AIR CLEARANCE WILL CAUSE A STRUCTURE FIRE.

DETAILED INSTRUCTIONS FOR INSTALLATION OF THE CHASE TOP, STORM COLLAR AND TERMINATION CAP ARE PACKAGED WITH THESE PARTS.

FIRESTOP SPACERS MUST BE USED WHENEVER THE CHIMNEY PENETRATES A CEILING/FLOOR AREA.

THE CHIMNEY MUST BE SOUND AND FREE OF CRACKS. CLEAN YOUR CHIMNEY A MINIMUM OF TWICE A YEAR AND AS REQUIRED.

A raised hearth together with the appliance built on a raised platform is recommended for easier wood loading and fire viewing.

4.1 CHIMNEY

<u>NOTE:</u> All venting connections must be in compliance with the chimney manufacturers installation instructions.

This appliance was tested to CAN/ULC S610 and UL 127 Factory Built Fireplace Standards. This appliance has met the test criteria for Zero Clearance Installation to Combustible Surfaces and Certified to burn firewood only.

Any 8” diameter chimney listed to these standards may be installed. In accordance with these standards, the appliance may also be connected to any chimney listed to CAN/ULC-S604 and CAN/ULC-S629 for Canada or UL-103HT for the United states.

Installation of all types of factory-built chimney systems is to be in accordance with the chimney manufacturers installation instructions. An appropriate chimney manufacturers anchor base plate and anchor base plate gasket is required in order to initiate their system. Use the high temperature gasket, supplied, to seal between the anchor plate and the appliance top. Air cooled chimney systems are not recommended in colder climates.

ANCHOR PLATE FOR A FACTORY BUILT CHIMNEY

Complete installation instructions for Selkirk Ultra Temp Chimney for Canada and Ultra Temp Platinum Chimney for USA, refer to: www.selkirkinc.com/products/chimney.aspx

A chimney venting the appliance shall not vent any other appliance. The minimum overall chimney height from the top of the appliance is 15 feet. The maximum overall chimney height from the top of the appliance is 34 feet.

Factory-built chimney systems for use in dwellings constructed for three or more families must be enclosed above the room in which the appliance is located. This enclosure must have a fire resistance rating equal to or greater than that of the floor or roof assembly through which they pass.
The chimney should not be built with an offset angle in excess of 45° in Canada and 30° in USA.
Ensure that minimum clearances are maintained.
Portions of the chimney that extend through accessible spaces must always be encased to avoid personal contact with the chimney and thereby avoid damage to the chimney.
The chimney must be supported at a maximum of 20 foot intervals (approx. 200 lbs/20 FT).

4.2 TYPICAL CHIMNEY INSTALLATION

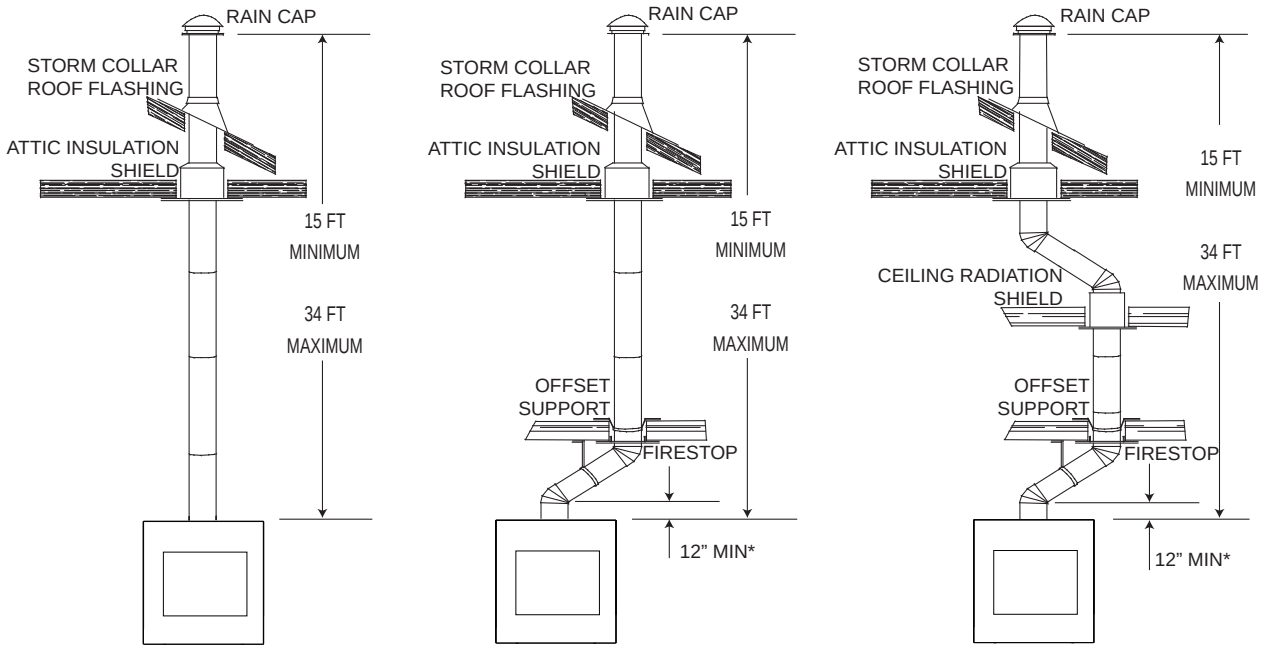

STRAIGHT CHIMNEY | **SINGLE OFFSET CHIMNEY** | **DOUBLE OFFSET CHIMNEY**

*** The first flue offset closest to the top of the appliance must be a minimum distance of 12" from the top of the appliance.**

1. Move the appliance into position. Try to center the exhaust flue of the appliance, midpoint between two joists to prevent having to cut them. Use a plumb bob to line up the centre.

2. Cut and frame an opening in the ceiling to provide a minimum clearance of 2" between the outside of the chimney and any combustible material. **DO NOT FILL THIS SPACE WITH ANY TYPE OF MATERIAL!** Nail headers between the joists for extra support. Firestop spacers must be placed on each framed opening in any floor or ceiling that the chimney passes through.

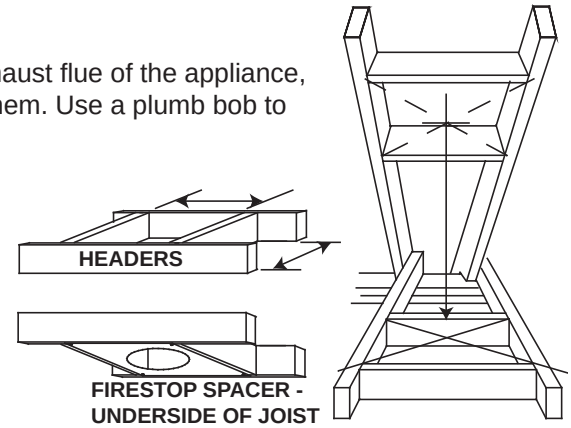

3. Hold a plumb bob from the underside of the roof to determine where the opening in the roof should be. Cut and frame the roof opening maintaining proper 2" clearances.

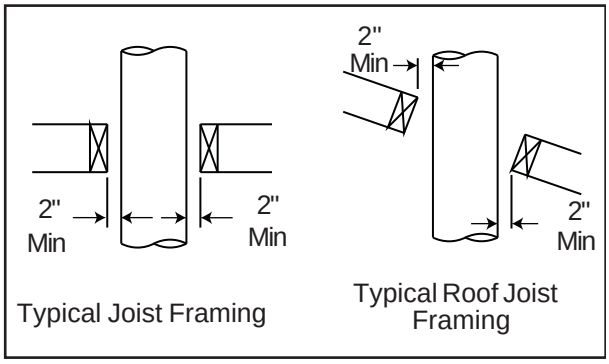

NOTE: 30° or 45° offsets may be installed back to back.

4.3 ADDING CHIMNEY SECTIONS

Add chimney sections, securely, to the required height.
If the chimney system is enclosed within the attic area, a rafter radiation shield is required.
The chimney must extend at least 3 feet above its point of contact with the roof and at least 2 feet higher than any wall, roof or building within 10 feet.
If the chimney extends more than 5 feet above the roof, it must be secured using a roof brace or guide wires.
A raincap must be installed to avoid internal damage and corrosion.

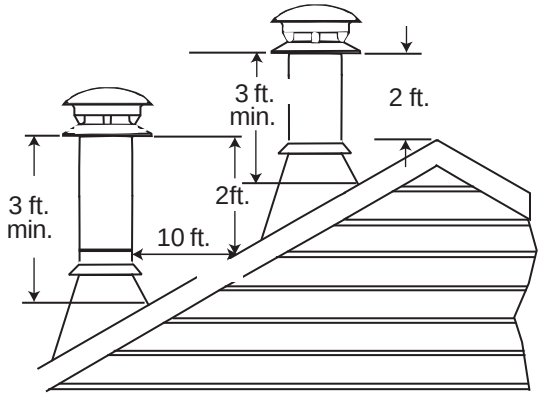

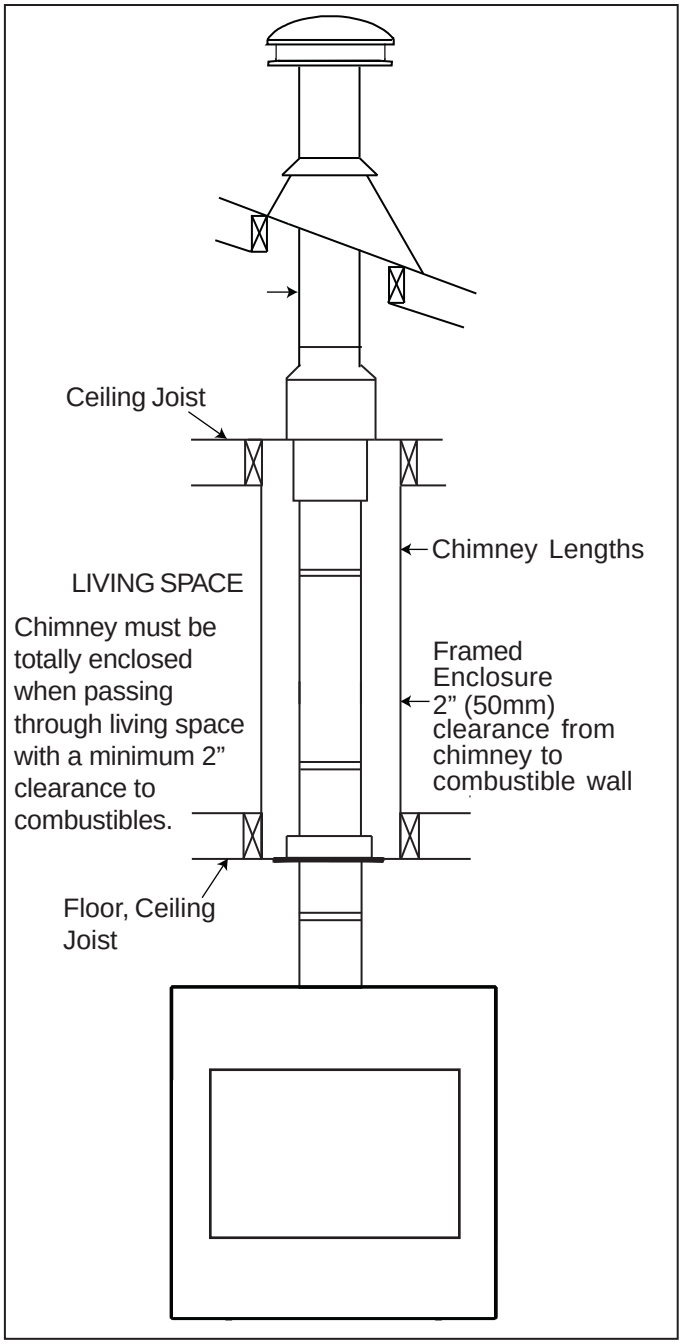

4.4 OFFSET CHIMNEY INSTALLATION

WARNING

CHIMNEY SECTIONS INSTALLED BETWEEN AN OFFSET AND RETURN REQUIRE STRUCTURAL SUPPORT TO REDUCE OFF-CENTER LOADING AND TO PREVENT CHIMNEY SECTIONS FROM SEPARATING AT THE CHIMNEY JOISTS.

THE CHIMNEY SHOULD NOT BE BUILT WITH AN OFFSET ANGLE IN EXCESS OF 45° IN CANADA AND 30° IN USA. DO NOT COMBINE OFFSET CHIMNEY COMPONENTS TO EXCEED THESE ANGLES.

The first flue offset closest to the top of the unit must be a minimum distance of 12" from the top of the appliance.

Attach an elbow to the chimney section, angled toward the offset. Secure with 3 sheet metal screws.
To achieve the minimum offset, attach and secure a second elbow. To achieve longer offsets, you may install any available length of chimney pipe between the elbows. Supports must be used on the first vertical chimney section after a return elbow.

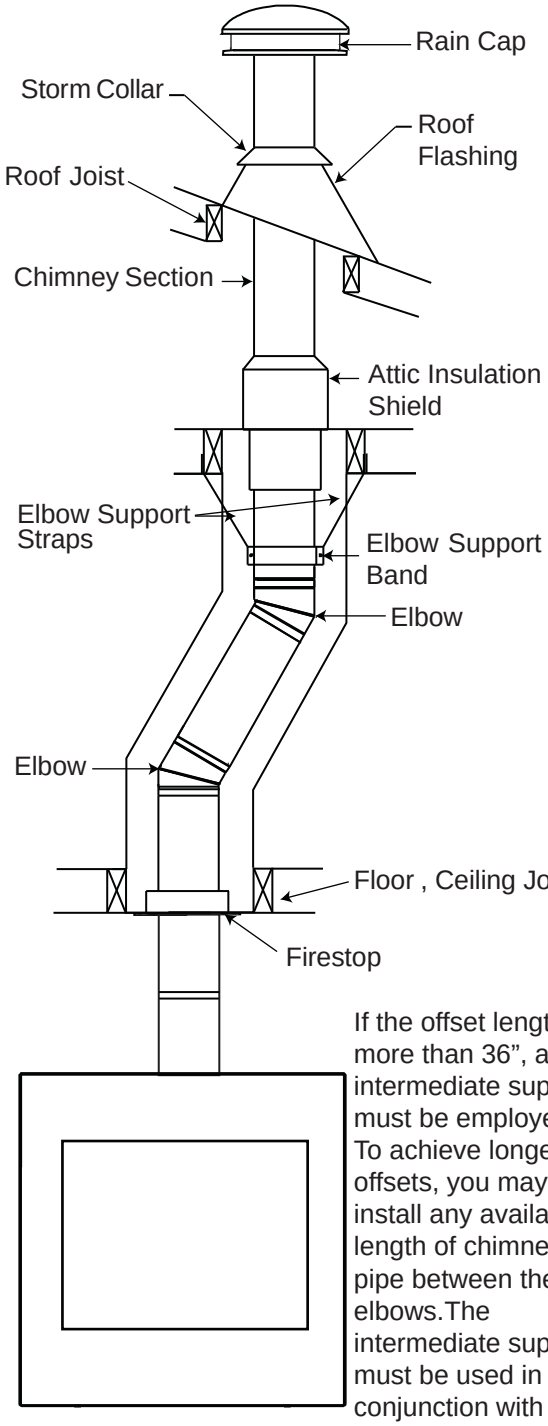

If the offset length is more than 36”, an intermediate support must be employed. To achieve longer offsets, you may install any available length of chimney pipe between the elbows.The intermediate support must be used in conjunction with an offset support.

4.5 INSTALLING FLASHING AND STORM COLLAR

Remove the nails from the shingles above and to the sides of the chimney. Place the flashing over the chimney pipe and slide underneath the sides and upper edge of the shingles. Ensure that the chimney pipe is properly centered within the flashing, giving a 3/4" margin all around. Fasten to the roof on the top and sides. DO NOT NAIL through the lower portion of the flashing. Make weather-tight by sealing with caulking. Where possible, cover the sides and top edges of the flashing with roofing material. Apply waterproof caulking, provided with the flashing, around the chimney, 1" above the top of the flashing and push the storm collar down into the caulking. Insert a rain cap onto the top of the last chimney section.

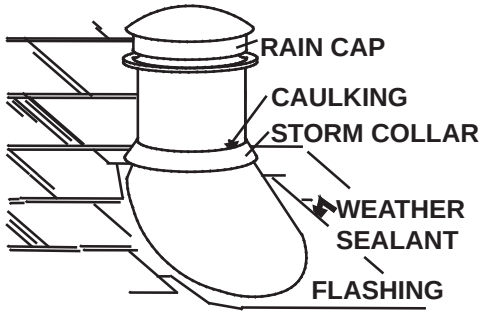

88.1

4.6 CONNECTION TO A MASONRY CHIMNEY

The appliance may be connected to either a lined or unlined masonry chimney.

IF THE CHIMNEY IS LINED:
The flues must be made of vitrified clay and be in sizes of 8" square or 8" round (inside diameters) or 8"x12" with a minimum height of 15 feet above the appliance.

Eight inch round flues are recommended.

Installation must conform to both national and local code requirements.

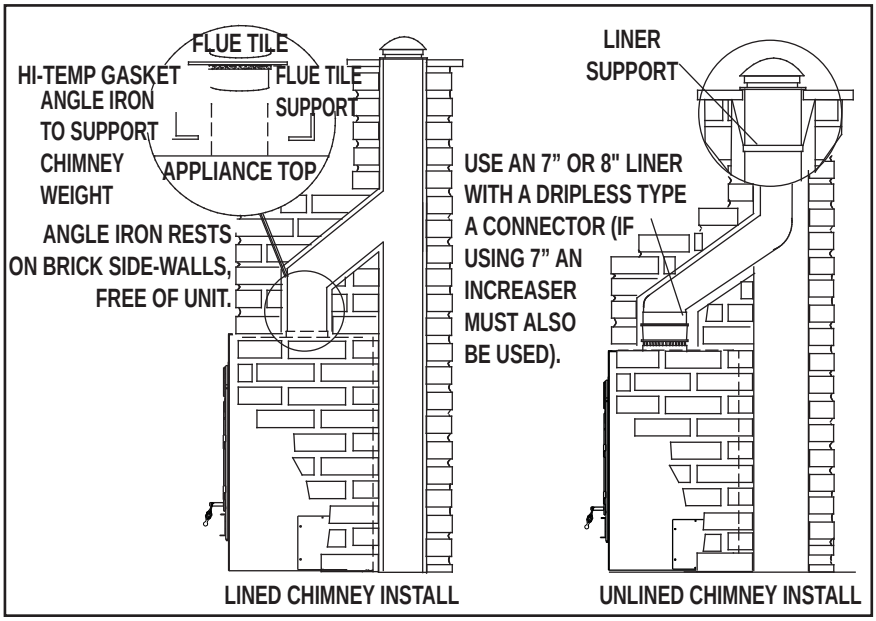

IF THE CHIMNEY IS UNLINED:
A stainless steel liner listed to either Standard ULC-S640M in Canada or UL-1777 in the USA, must be used: Liners for New Masonry Chimneys, may be used to connect the appliance to the chimney. The liner must be continuous from the appliance to the chimney cap and be installed only per manufacturers instructions.

In both cases, the chimney structure must be supported by angle iron anchored into the masonry walls. The allowable masonry used in chimney construction is 3-1/2" brick, solidly mortared and must fully encase the flue. Ensure there are no leaks.

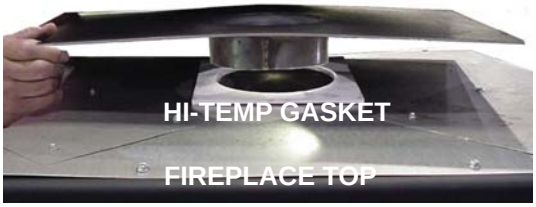

FOR A MASONRY FIREPLACE USE A FLUE TILE SUPPORT. FOR A PRE-FABRICATED CHIMNEY USE AN ANCHOR PLATE.

In no case is the masonry enclosure to be supported by the appliance. Allow a 1" (one inch) air cavity for expansion. Use the flue tile support accessory, see your local authorized dealer / distributor.

NOTE: The flue tile support is to be suspended on appropriate lintels.

62.4B

4.7 AIR COOLED CHIMNEY INSTALLATION

A. Remove the knock out.

B. Cut away the insulation to gain access to the ring.

C. Remove the ring secured by four screws.

D. Slide the starter collar through the insulation wrap and affix using the four screws removed in step 3.

E. Secure the inner liner of the chimney to the appliance 8" collar using 3 screws supplied with the starter collar (W170-0098).

F. Follow the chimney manufacturer's instructions for installing the chimney.

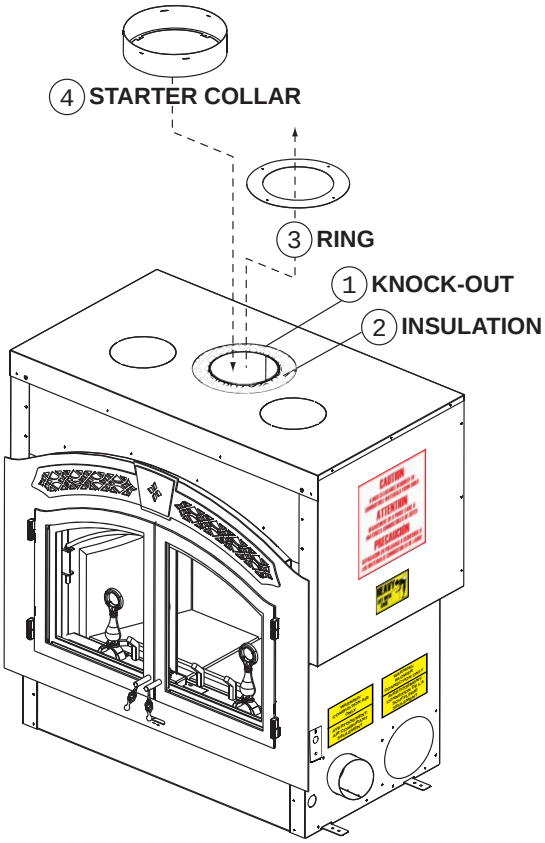

Use only the following brand and type of chimney.

CHIMNEY COMPONENTS	FMI 8DM
12" Chimney Section	12-8DM
18" Chimney Section	18-8DM
24" Chimney Section	24-8DM
36" Chimney Section	36-8DM
48" Chimney Section	48-8DM
Offsets	30E-8DM
Flashing	6F8 or 12F8
Chimney Cap	RTL-8HT
Roof Support	38 RS
Firestop	FS-8DM
CHIMNEY COMPONENTS	**WOLF STEEL**
Starter Collar	NZAC-KT

5.0 FRAMING

⚠ WARNING

IN ORDER TO AVOID THE POSSIBILITY OF EXPOSED INSULATION OR VAPOUR BARRIER COMING IN CONTACT WITH THE APPLIANCE BODY, IT IS RECOMMENDED THAT THE WALLS OF THE APPLIANCE ENCLOSURE BE "FINISHED" (I.E.: DRYWALL / SHEETROCK), AS YOU WOULD FINISH ANY OTHER OUTSIDE WALL OF A HOME. THIS WILL ENSURE THAT CLEARANCE TO COMBUSTIBLES IS MAINTAINED WITHIN THE CAVITY.

A MINIMUM OF 6 INCHES TO COMBUSTIBLE MATERIALS IS REQUIRED TO BOTH SIDES OF THE APPLIANCE, SEE "MINIMUM CLEARANCE TO COMBUSTIBLES" SECTION.

DO NOT BUILD SHELVES OR CUPBOARDS INTO THE AREA ABOVE THE APPLIANCE.

OBJECTS PLACED IN FRONT OF THE APPLIANCE MUST BE KEPT A MINIMUM OF 48" AWAY FROM THE FRONT FACE OF THE APPLIANCE.

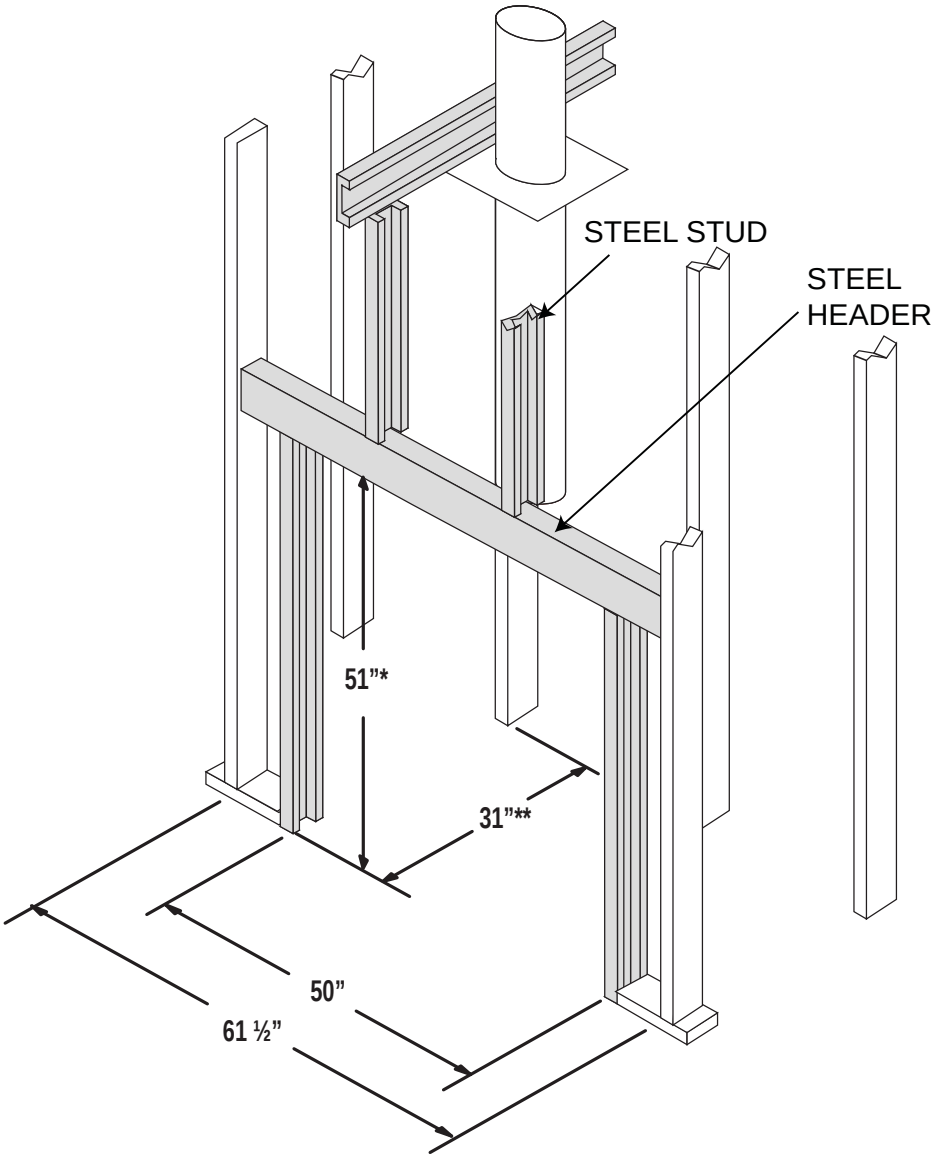

***** Allow for finished floor and hearth thickness when setting these dimensions.
** When constructing the enclosure allow for finishing material thickness and to maintain clearances.

5.1 WHEN USING A SOLID PACK CHIMNEY

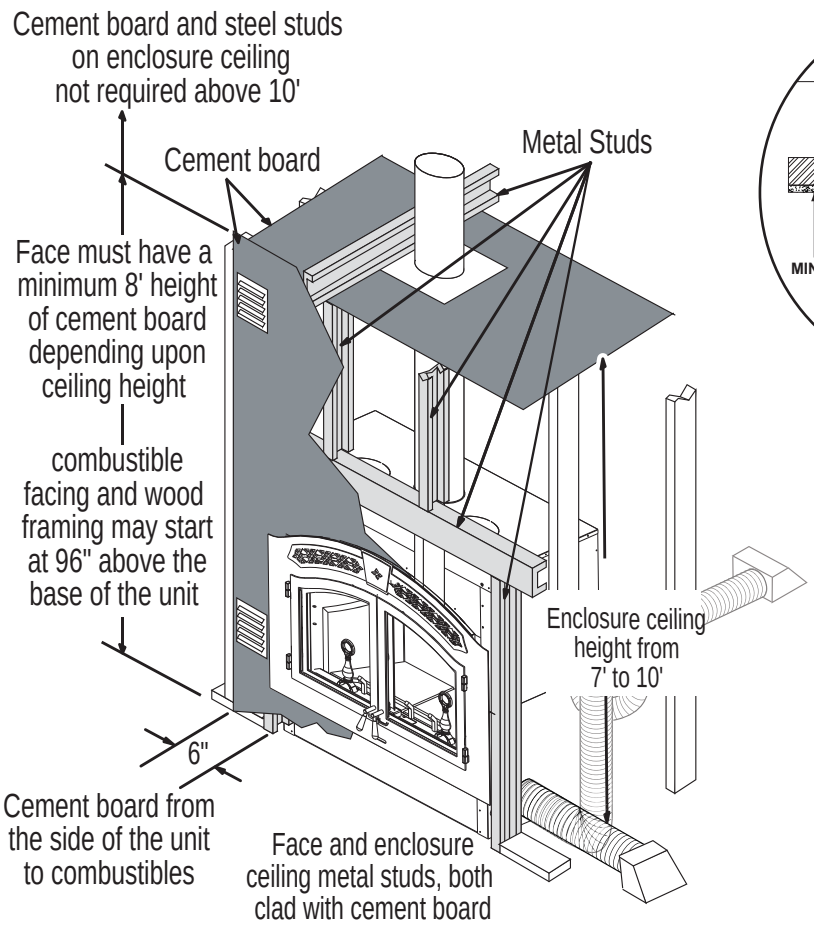

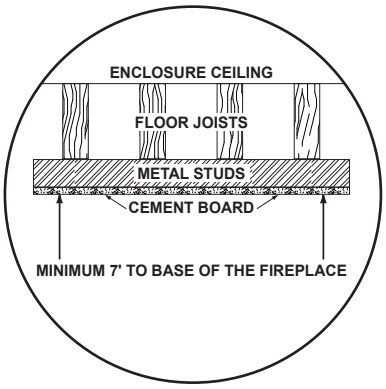

The appliance face and enclosure ceiling must be framed using 2x4 metal studs.

The minimum enclosure ceiling height is 7 feet.
Non - combustible materials (cement board and metal studs) must be used.

5.2 WHEN USING AN AIR COOLED CHIMNEY

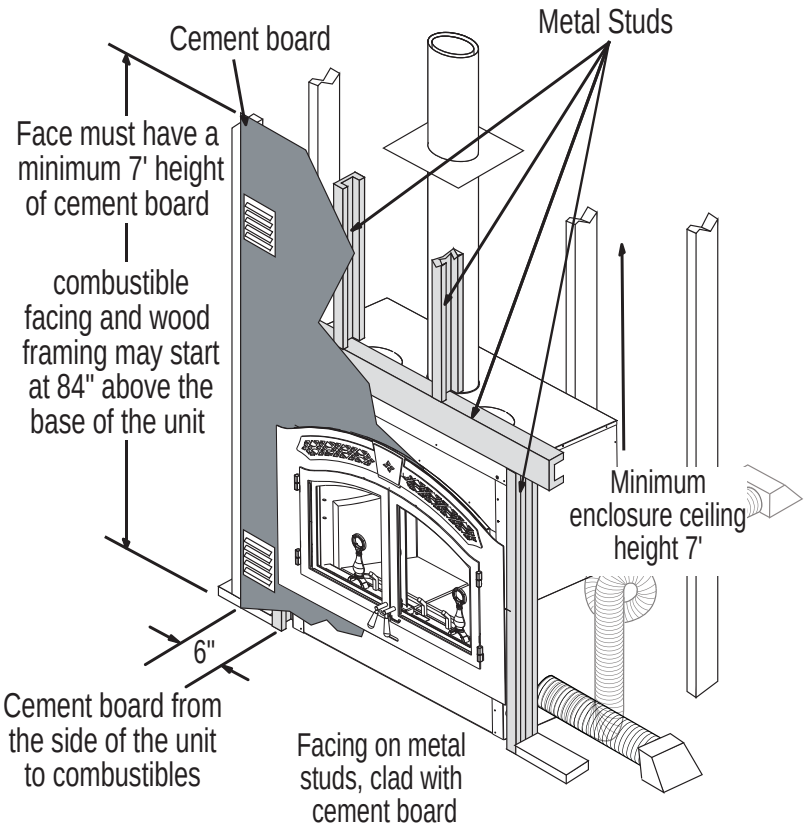

5.3 MINIMUM CLEARANCE TO COMBUSTIBLES

Framed Enclosure	
Rear	- 0" to stand-offs (rear)
Sides	- 6" to sides*
Ceiling (enclosure)	- 120" from the base of the appliance (unless shielded with metal studs and cement board)
Ceiling (in front of appliance)	- 84" from the base of the appliance
Chimney	- 2" (follow manufacturers instructions)
Hot air Gravity Ductwork Insulation	- 1"
Solid Pack Chimney	
Ceiling (enclosure)	- 120" from the base of the appliance (unless shielded with metal studs and cement board).
Air Cooled	
Ceiling (enclosure)	- 84" from the base of the appliance

5.4 MINIMUM ENCLOSURE CLEARANCES

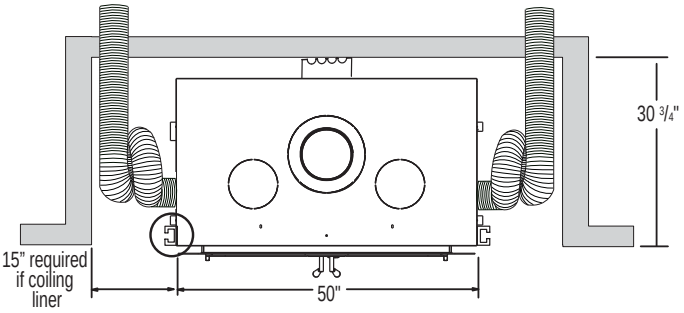

Shown with air intake liner coiled to create a cold trap.
OR
A minimum of 6" is required to combustibles from the side of the unit. This is only if the intake liner is routed below the 2" projection of the outer casing of the unit. If the intake liner is routed vertically along the side of the unit then a spacing of 7" is required.

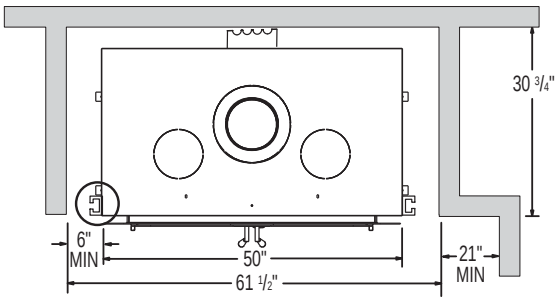

When framing in unit, allow for finishing material thickness.

A minimum of 6" is required to combustibles from the side of the unit. This is practical only if the intake liner is routed below the 2" projection of the outer casing of the unit. If the intake liner is routed vertically along the side of the unit then a spacing of 7" is required.

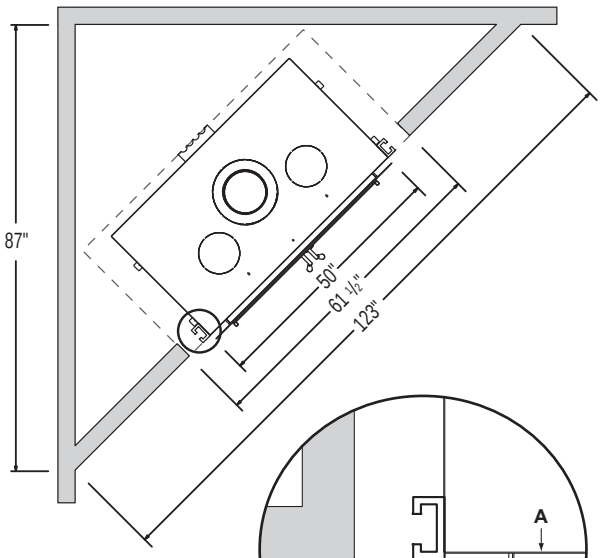

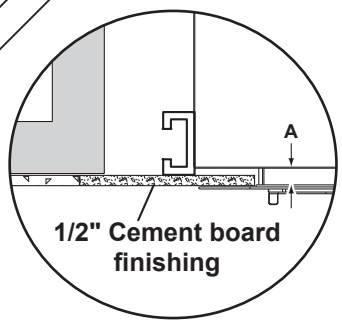

2 layers of 1/2" cement board needed to fill gap A.

5.5 MINIMUM MANTEL CLEARANCES

WARNING

RISK OF FIRE, MAINTAIN ALL SPECIFIED AIR SPACE CLEARANCES TO COMBUSTIBLES. FAILURE TO COMPLY WITH THESE INSTRUCTIONS MAY CAUSE A FIRE OR CAUSE THE APPLIANCE TO OVERHEAT. ENSURE ALL CLEARANCES (I.E. BACK, SIDE, TOP, VENT, MANTEL, FRONT, ETC.) ARE CLEARLY MAINTAINED.

WHEN USING PAINT OR LACQUER TO FINISH THE MANTEL, THE PAINT OR LACQUER MUST BE HEAT RESISTANT TO PREVENT DISCOLOURATION.

73.1

An optional combustible mantle must be a minimum of 12" above the top of the faceplate and not to extend more than 2" from the surface. See chart below for further information.

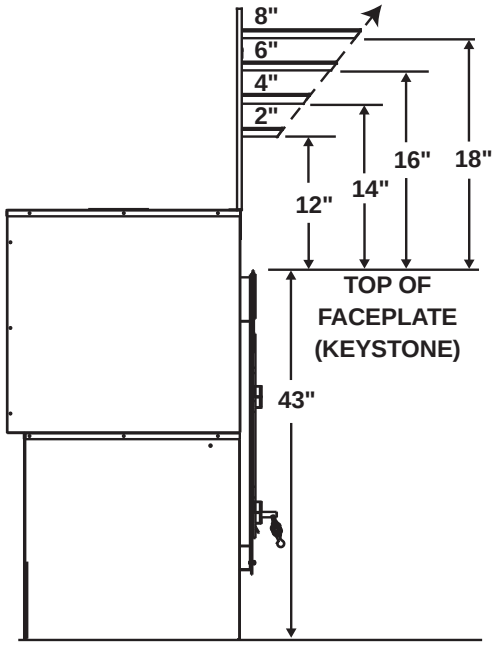

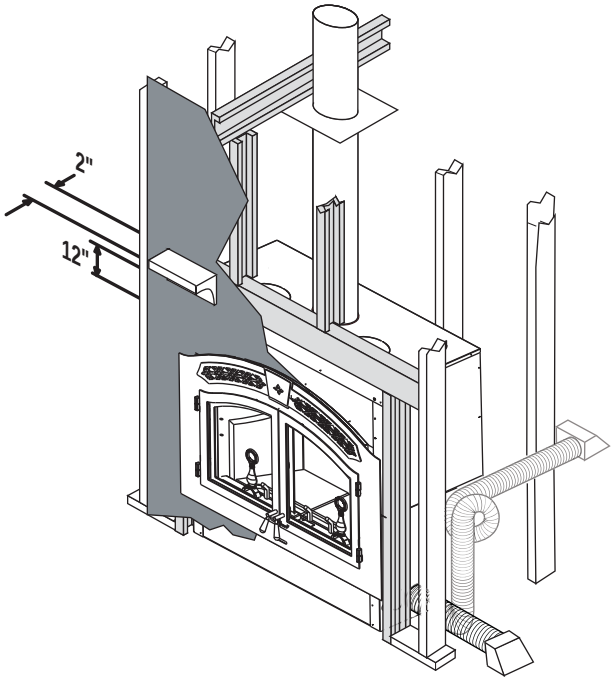

6.0 FINISHING

⚠ WARNING

USE ONLY A NON-COMBUSTIBLE MATERIAL TO FINISH THE FACE OF THE APPLIANCE. A NON-COMBUSTIBLE MATERIAL SUCH AS CEMENT BOARD IS REQUIRED FOR THIS PURPOSE.

VENTILATION OPENINGS ARE REQUIRED IN ENCLOSURES UP TO 96" HIGH. THEY ARE RECOMMENDED FOR ALL ENCLOSURES.

ABOVE 84" COMBUSTIBLE FINISHING MATERIALS MAY BE USED ON THE FRONT FACE.

DO NOT INSULATE AROUND THE APPLIANCE.

6.1 FACEPLATE

A. Remove the facing template held in place with the 12 screws shown. Discard the screws and template.

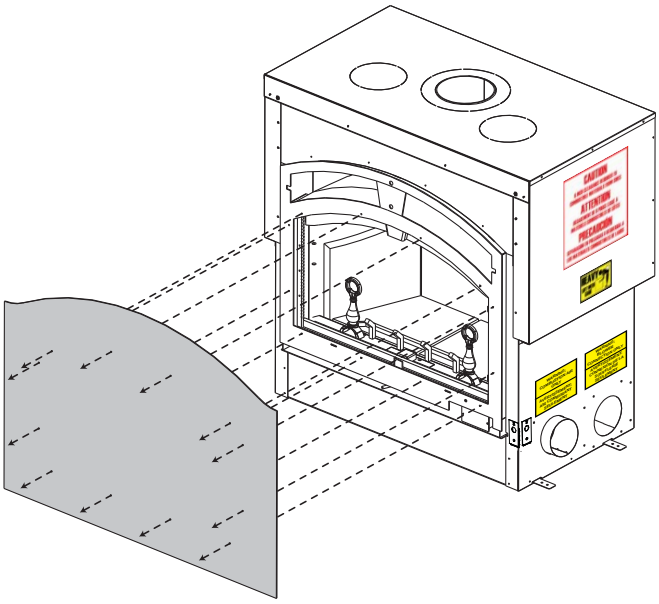

6.2 UPPER GRILL INSTALLATION

A. Mount the keystone and upper grill to the faceplate as shown, using the 4 nuts supplied.

Remove the backing and place logo onto the bottom left corner of the faceplate.

Ensure that the pressure switch actuating arm and air control rod, protrude through the faceplate when installed.

Remember to record your serial # in the manual for future quick reference.

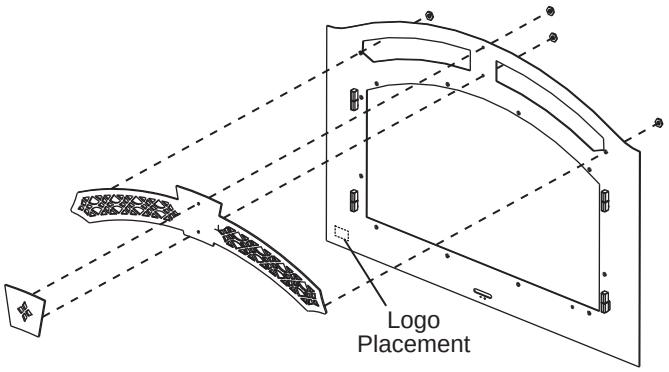

6.3 KEYSTONE INSTALLATION

A. Secure the faceplate to the appliance, using the 12 screws supplied. Start all 12 screws, then tighten evenly.

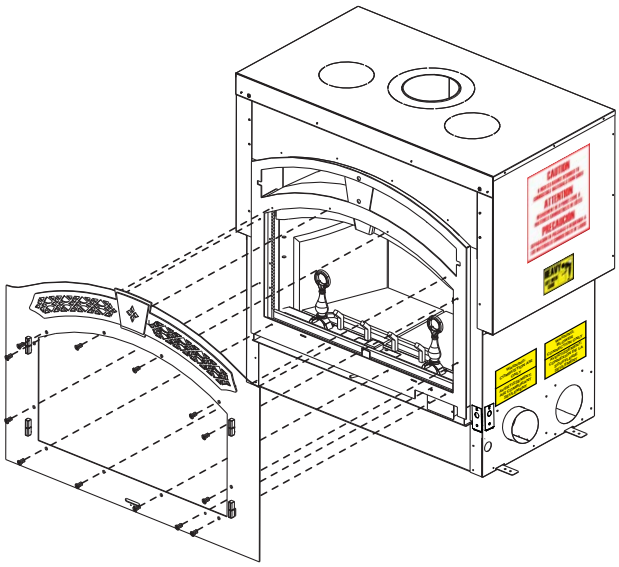

6.4 DOOR HANDLE INSTALLATION

RIGHT DOOR HANDLE (OPERATING)

- Insert the door rod through the round hole of the latch ensuring the flat edge of the “D” shaped hole points towards the hinges.
- Slide the end of the door rod through the bushing at the top of the door as shown.
- Insert the handle shaft through the door and the latch.
- Secure with 2 flat washers and a nut.
- Feed the handle through the handle spacer and into the handle shaft.

LEFT DOOR HANDLE (FIXED)

- Insert the handle shaft through the door.
- Secure with a lock washer, 2 flat washers and a nut.
- Feed the handle through the handle spacer and into the handle shaft.

See Note #2

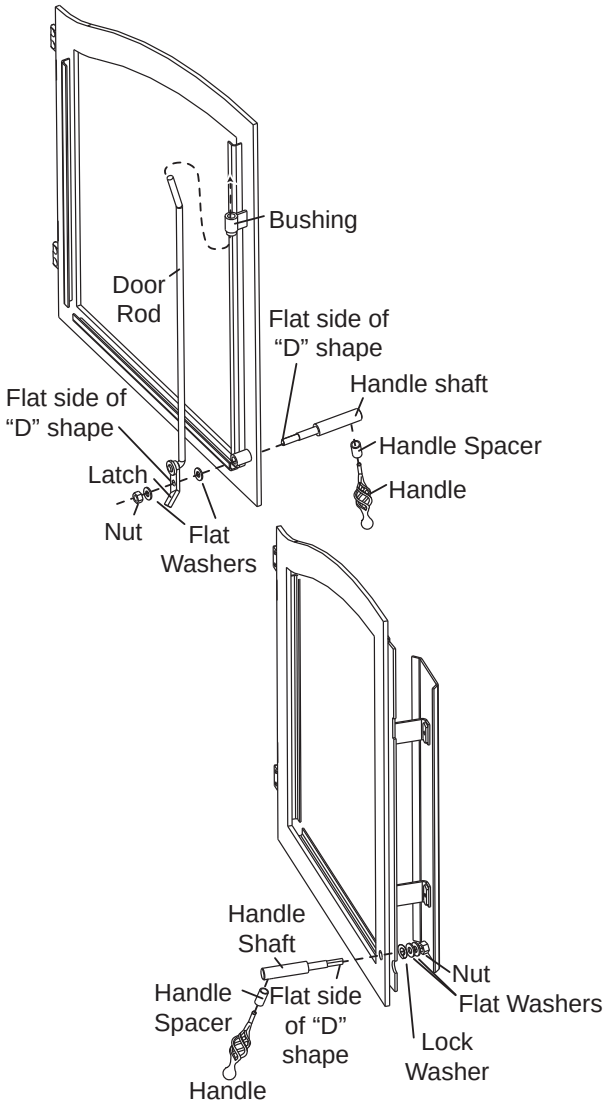

Note #1:
You may need to move washers to the other side of the latch to obtain sufficient door seal.

Note #2:
The final angle of the left door handle should mirror the right door handle in the closed position. Tighten the nut to secure the left handle at the desired angle.

6.5 DOOR INSTALLATION

Place brass washers onto the faceplate hinge bushing (2 extra washers are supplied in order to level the doors if needed).

Slide the door hinge pin into the faceplate hinge bushing.

To remove the doors, open them slightly and lift them out of the faceplate hinge bushings.

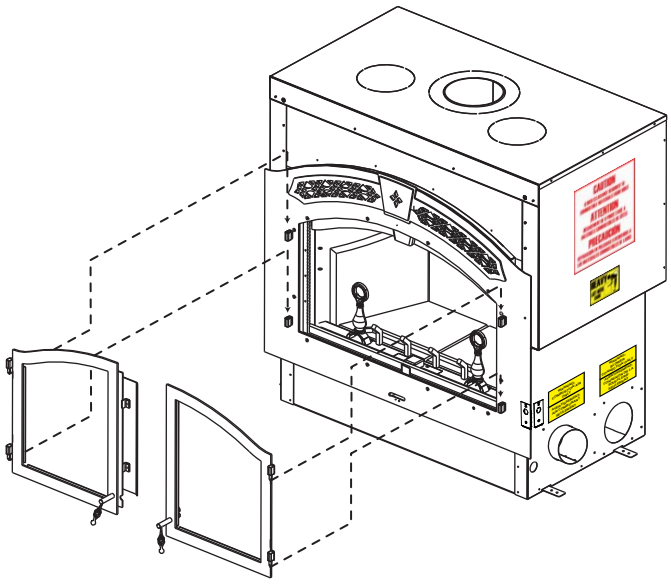

6.6 DOOR HANDLE INSTALLATION

The door latch is adjusted by moving the washer from one side of the latch to the other. Tighten the outer nut to secure the latch.

CROSS-SECTION OF DOOR & GLASS

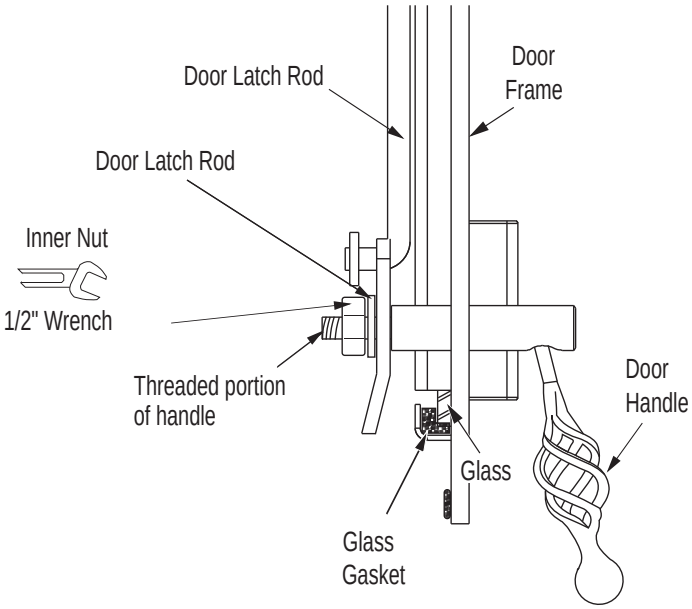

6.7 CONTROL ROD AND HANDLE INSTALLATION

Install the air control threaded rod and knob.

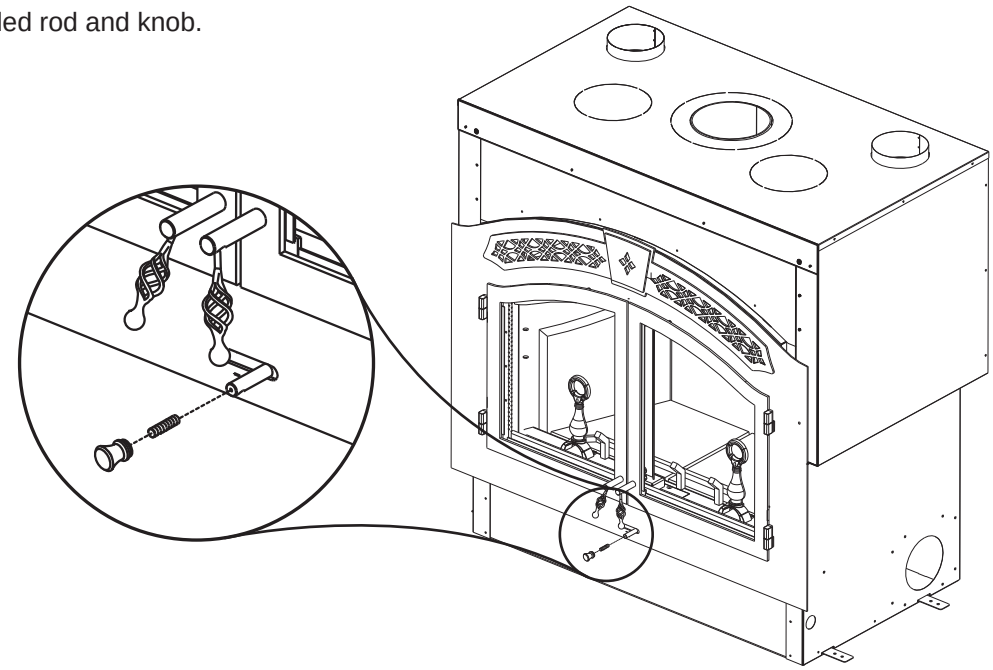

6.8 SECONDARY AIR TUBE REMOVAL / INSTALLATION

Place the gasket and the secondary air tube W010-1594 against the rear of the firebox onto the studs and secure using brass nuts.

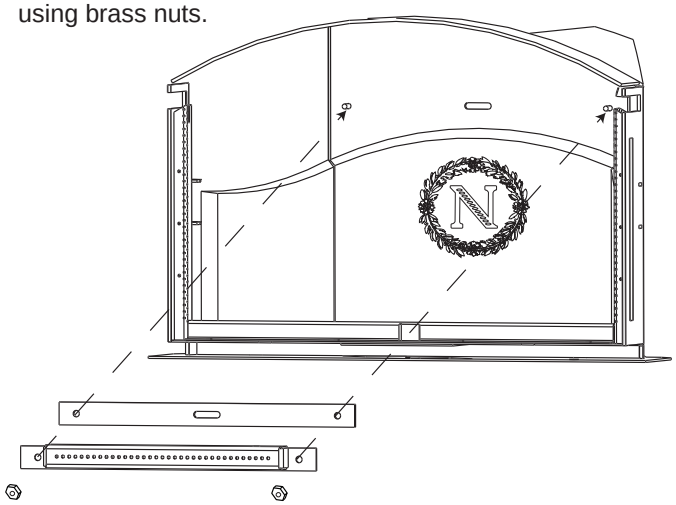

6.9 FIREBRICK AND BAFFLE INSTALLATION

⚠ WARNING

OPERATION OF THE APPLIANCE WITHOUT THE BAFFLES CAN RESULT IN EXCESSIVE TEMPERATURES THAT COULD DAMAGE THE APPLIANCE, CHIMNEY AND THE SURROUNDING ENCLOSURE.

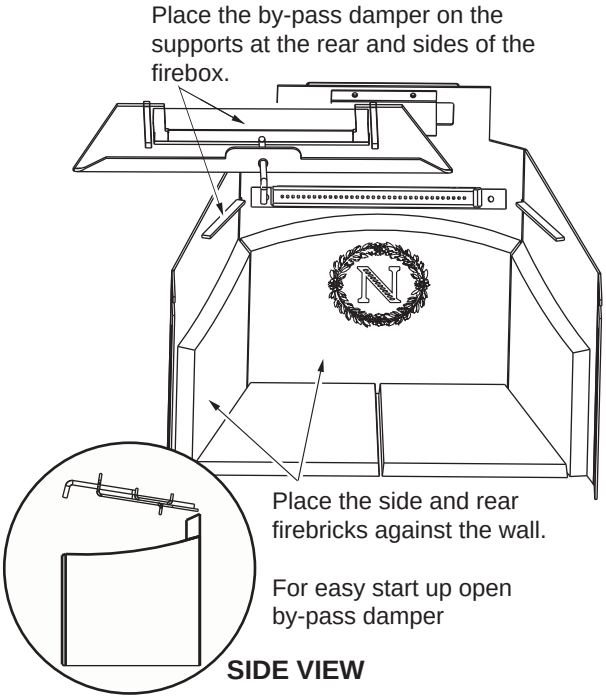

6.10 OPTIONAL NZ64 BLOWER INSTALLATION

⚠ WARNING

ALL WIRING SHOULD BE DONE BY A QUALIFIED ELECTRICIAN AND SHALL BE IN COMPLIANCE WITH LOCAL CODES AND WITH THE NATIONAL ELECTRIC CODE ANSI/NF NO. 70-CURRENT (IN THE UNITED STATES), OR WITH THE CURRENT CSC22.1 CANADIAN ELECTRIC CODE (IN CANADA).

NOTE: Consideration should be made for blower location as the closer to the appliance the greater the air flow noise will be. Blower may be installed on either side of the appliance.

Route a 120 Volt, 60Hz electrical supply (not supplied) from the electrical box on the side of the appliance to the electrical box on the blower housing.

The appliance comes complete with a safety switch and a thermally activated switch.

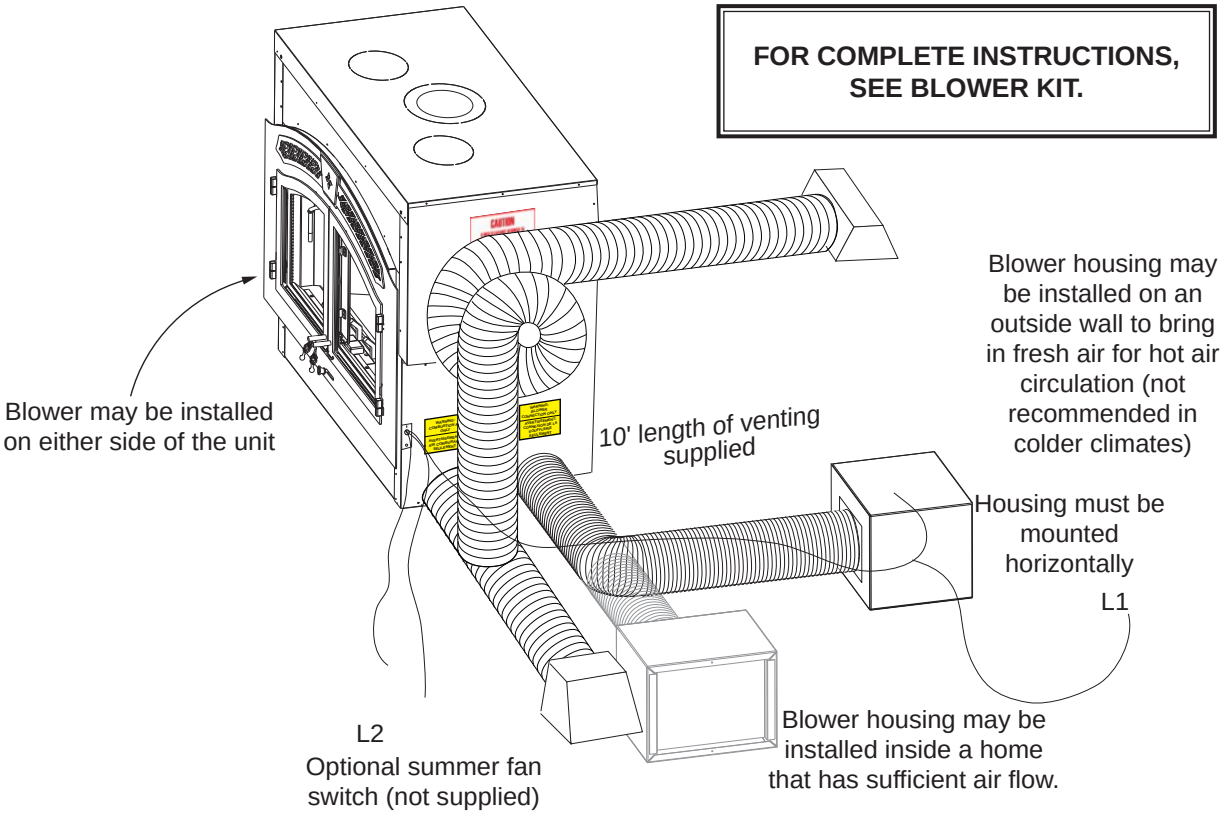

A. Remove the template.

B. Position the blower to an inside or outside wall into a framed opening 12 $^{3}/_{8}$" wide by 10 $^{1}/_{2}$" high. (Outside wall not recommended in colder climates as cold air may be drawn into the house when the appliance is off.)

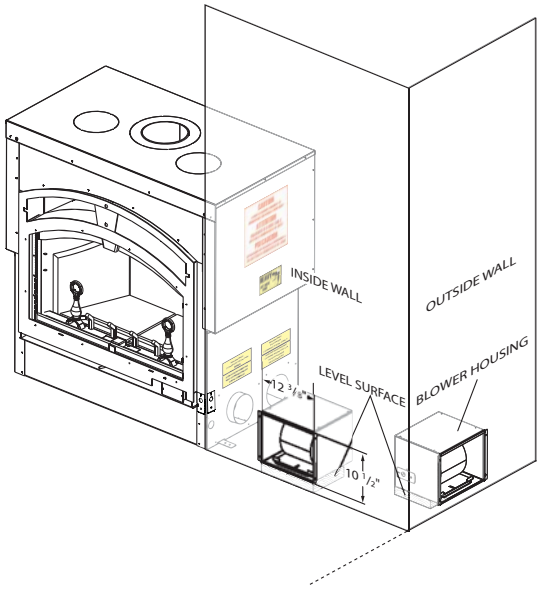

The blower housing should be installed onto a level surface large enough to support the blower assembly.

Allow for finishing material when securing the blower housing, as the grill mounts to the housing.

C. Connect the 6” collar to the blower opening located on the side of the appliance. An optional opening is covered on the other side of the appliance. If this location is preferred, switch the cover plate and collar.
Secure by reaching through the collar and bending the tabs.
Use sealant to ensure that the connection is air tight.

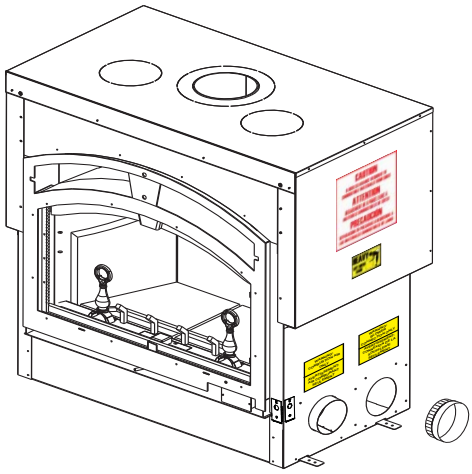

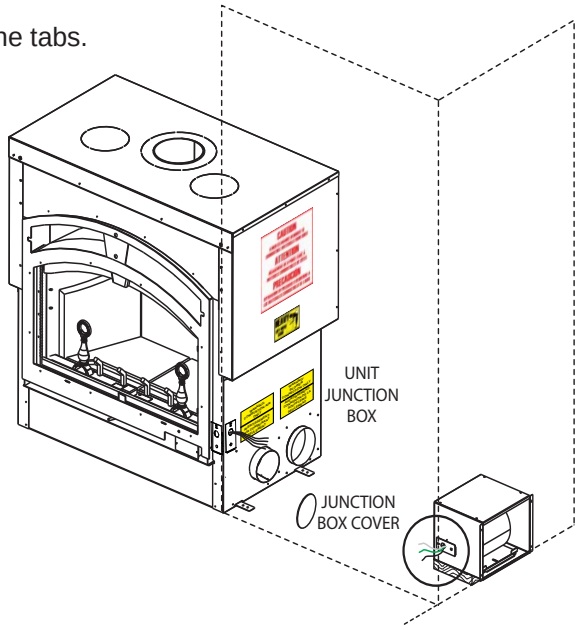

We recommend installing the blower in a different room or even different level of the house. This will generate greater air movement and improve the distribution of the warm air coming from the appliance.

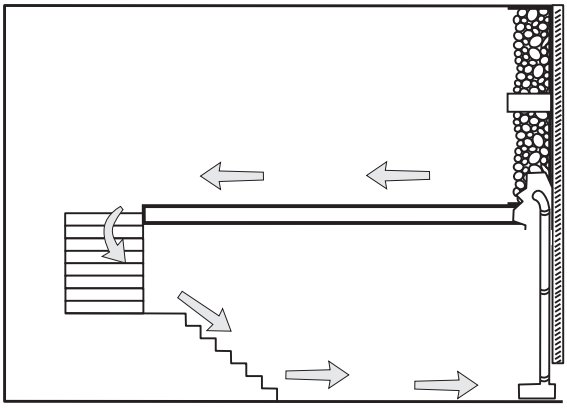

D. **<u>Electrical Connection</u>**

a) Remove the junction box covers on the appliance and the blower.
b) Removing the junction box cover on the ***appliance*** exposes 4 black, labeled wires:
Two wires labelled "by-pass" - go to by-pass (summer) switch (not supplied - overrides the thermally activated switch enabling the user to run the blower without heat).

<u>IMPORTANT:</u> Marrett by-pass (summer) switch wire leads separately (do not connect together), if the by-pass switch is not desired.

One wire labelled "blower" - connects to KB-35 rheostat (not supplied) and then fan-speed control blower wire connects to white blower wire.
One wire labelled "L1" - connects to power (hot lead).

c) Removing the junction box cover on the ***blower*** exposes 3 coloured wires:
One black wire - connects to power "L2" (neutral lead).
One green wire - connects to ground.
One white wire - connects to fan-speed control rheostat (not supplied) See above.

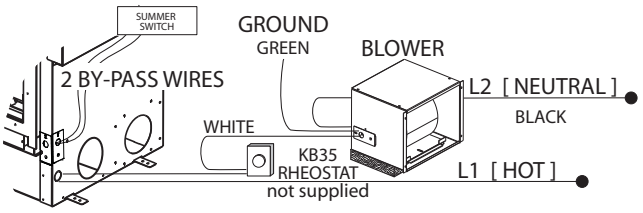

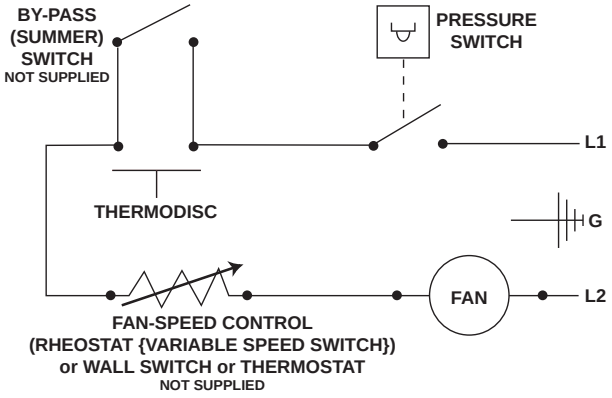

E. Connect the 6” liner to the appliance and blower collars. Secure using 3 screws on each end and seal with caulking.

Liner supplied stretches to a maximum of 10’.

F. Insert the filter into the grill. Foam gasket ($^1/_2$” weather stripping) between the grill and blower housing is recommended, but not supplied.

The blower filter is washable.

G. The bottom lip of the grill latches over the bottom lip of the housing. Use two screws to secure the top of the grill to the facing.

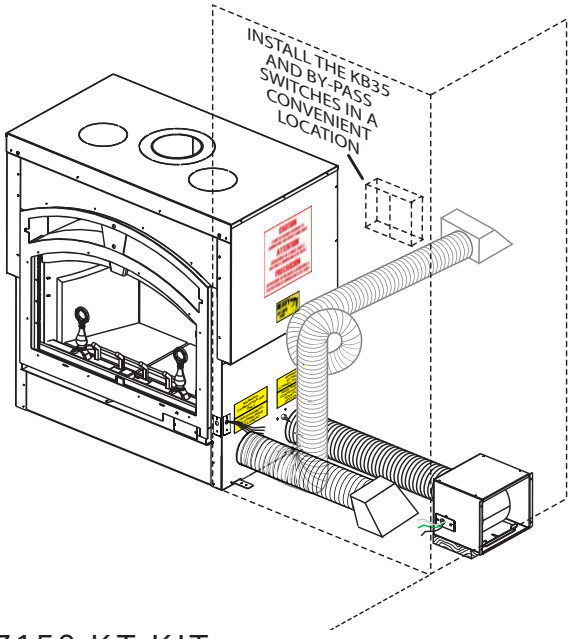

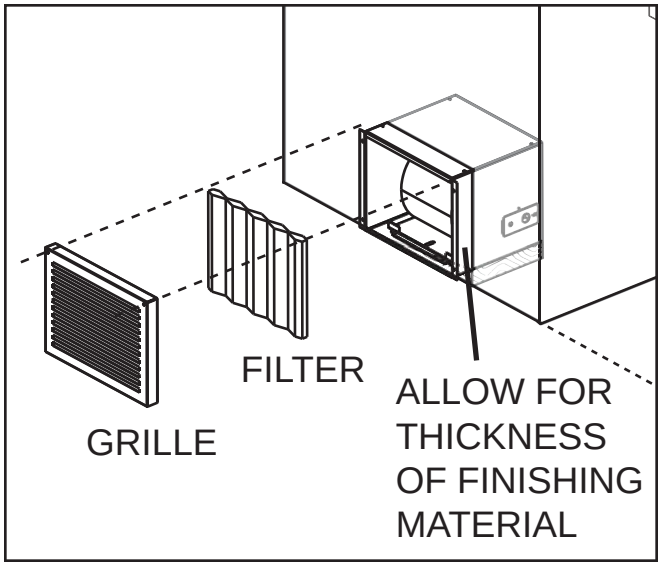

6.11 NZ150-KT KIT

The circulation air inlet pipe must terminate outside of the appliance enclosure to ensure proper air flow around the firebox.

The 6" circulation air inlet pipe may be connected to either the NZ64 blower kit or the NZ150-KT kit.

Avoid terminating higher than the bottom of the doors on the appliance to prevent air flow reversal.

An optional opening is covered on the other side of the appliance. If this location is preferred, switch the cover plate and collar.

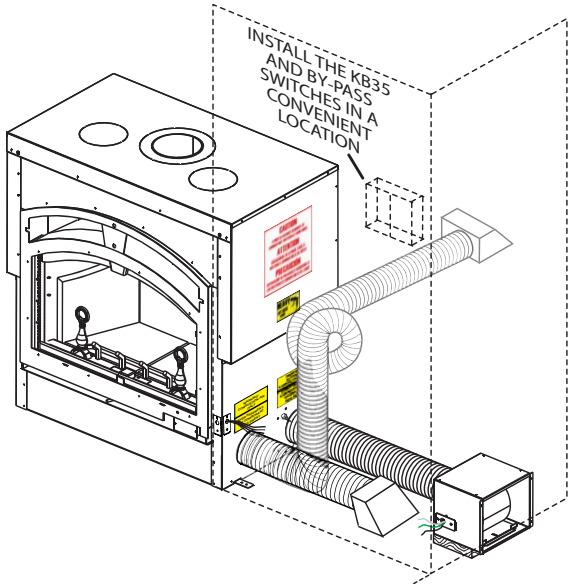

6.12 NSK6 OPTIONAL SCREEN KIT

Use the screen when you are in the room to enjoy the ambience of an open, wood crackling fire.
Medium sized wood loads should be used to prevent logs from rolling against the screen.
Chimney action may not allow the screen to be used in some installations due to the resulting smoke spillage.
Opening the by-pass damper may help prevent smoke spillage. Wood will burn at a faster rate and heat output will be less with the screen compared to the stove operation with the glass doors closed.

6.13 SMOKE SHELF

To reduce smoke spillage due to a poor chimney draft, the NZ6000 can be equipped with an optional smoke shelf extension kit (NZ-SMS).

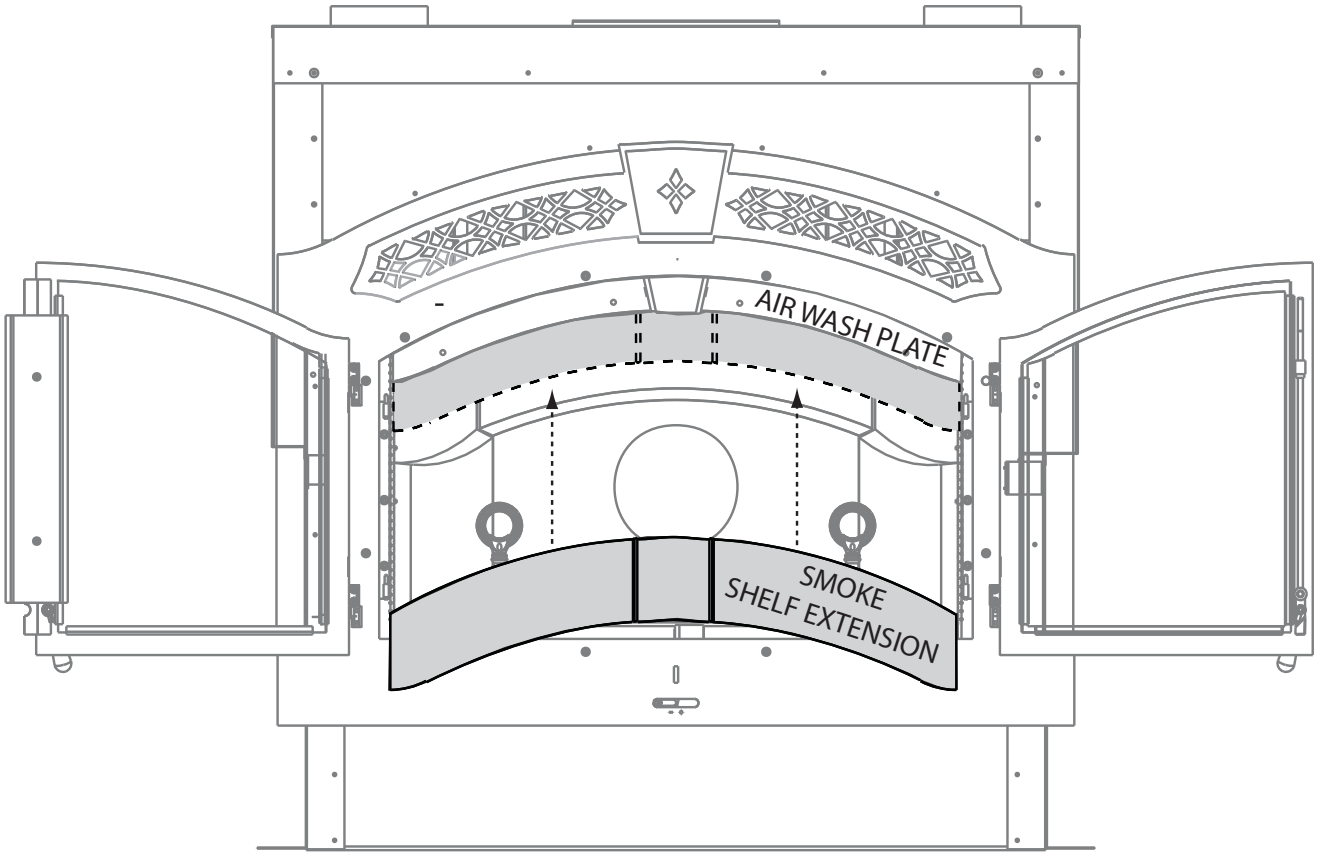

7.0 SELECTING WOOD

⚠ WARNING

THIS APPLIANCE IS DESIGNED TO BURN NATURAL WOOD ONLY. DO NOT BURN TREATED WOOD, COAL, CHARCOAL, COLOURED PAPER, CARDBOARD, SOLVENTS OR GARBAGE. THIS APPLIANCE HAS NOT BEEN TESTED WITH AN UNVENTED GAS LOG SET. TO REDUCE RISK OF FIRE OR INJURY, DO NOT INSTALL AN UNVENTED GAS LOG SET INTO THE APPLIANCE.

HIGHER EFFICIENCIES AND LOWER EMISSIONS GENERALLY RESULT WHEN BURNING AIR DRIED SEASONED HARDWOODS, AS COMPARED TO SOFTWOODS OR TOO GREEN OR FRESHLY CUT HARDWOODS.

BURNING WET UNSEASONED WOOD CAN CAUSE EXCESSIVE CREOSOTE ACCUMULATION. WHEN IGNITED IT CAN CAUSE A CHIMNEY FIRE THAT MAY RESULT IN A SERIOUS HOUSE FIRE.

DO NOT STORE FUEL WITHIN THE CLEARANCE TO COMBUSTIBLES, OR IN THE SPACE REQUIRED FOR RE-FUELING AND ASH REMOVAL.

When loading the appliance, ensure that the upper fibre baffles are not forced out of position. For maximum efficiency, when the appliance is thoroughly hot, load it fully to the top of the door opening and burn at a medium low setting. The whiteness of the bricks and the cleanliness of the glass are good indicators of your operating efficiency. Not enough heat is produced when only a few pieces of wood are burned or the wood may not burn completely.

Fuel for the appliance must not be stored closer than the required clearances to combustibles (heat sensitive material). N**EVER STORE WOOD IN THE ASH PAN COMPARTMENT (if applicable).**

NOTE: When loading the appliance, ensure to keep fuel back from the glass. If coals are to accumulate on the front lip, there is a chance they will fall out when the door is opened.

Burn only dry, clean unpainted wood that has been seasoned. It produces more heat and less soot or creosote. Freshly cut wood contains about 50% moisture while after proper seasoning only about 20% of the water remains. As wood is burned, this water boils off consuming energy that should be used in heating. The wetter the wood, the less heat is given off and the more creosote is produced. Dry firewood has cracks in the end of the grain.

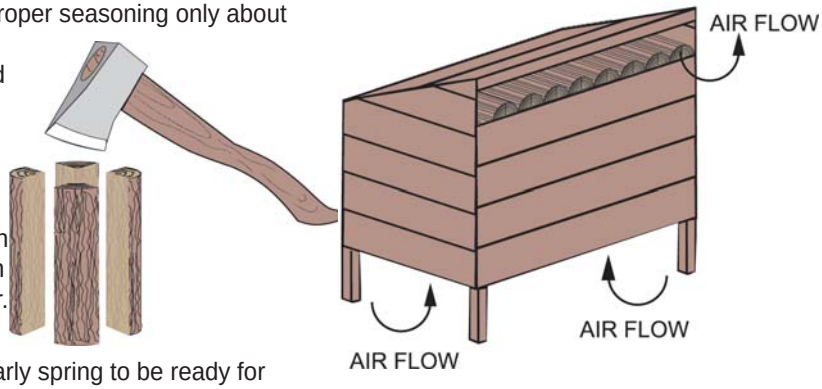

Both hardwood and softwood burn equally well in this appliance but hardwood is denser, will weigh more per cord and burn a little slower and longer.

Firewood should be split, stacked in a manner that air can get to all parts of it and covered in early spring to be ready for burning that fall. Dry firewood has cracks in the end grain.

Cut the wood so that it will fit horizontally, front to back, making for easier loading and less of a likelihood that the wood will roll onto the glass.

Manufactured firelogs made by compressing 100% natural wood fibre can be safely used as fuel. Do not use manufactured firelogs if they contain additives such as paraffin, wax, binders etc. Never burn more than two manufactured firelogs at a time.

DO'S

- Build a hot fire.
- Use only dry wood.
- Several pieces of medium sized wood are better than a few big pieces.
- Clean chimney regularly.
- Refuel frequently using medium sized wood.
- "Fine Tune" the air settings for optimum performance.

DONT'S

- Take ash out immediately. Let it accumulate to a depth of at least one inch. A good ash layer provides for a longer lasting and better burning fire.
- Burn wet wood.
- Close the door too soon or damper down too quickly.
- Burn one large log rather than two or three smaller, more reasonably sized logs.
- Burn at continually "low setting", if glass door is constantly blackened. This means the firebox temperature is too low.

87.1B

8.0 OPERATION

Expansion / contraction noises during heating up and cooling down cycles are normal and to be expected.

TIPS FOR BURNING:

- Create a large fire to heat up the appliance before adjusting to a slower burn.
- To create a large, quick burning fire, use small pieces of wood.
- For a lower, but extended burn, stack larger pieces of wood close together.
- For long burns, leave a 1-2" bed of ashes.
- Burn dry wood only.
- With the exception of overnight burns, create large, quick burning fires whenever possible. Smaller, slow burning fires, using large logs, cause the glass to become dirty. Larger, quick burning fires using medium sized wood to refuel frequently are much more efficient.

47.18

8.1 OPERATING SOUNDS AND SMELLS

A slight humming sound may be heard depending on the location of the blower. This sound may be minimized by turning down the blower speed.

When first installed, the appliance and the steel are cold and must become hot before the appliance will function well. During the break-in period (the first 2 or 3 fires) create only small, hot fires using kindling; this will allow the firebrick to cure. Do not be alarmed if small hairline cracks develop in the firebrick. This is a normal occurrence and does not pose a safety hazard. The paint may also smell a little for the first few fires as it cures and you may wish to open a door or window to alleviate the smell.

There are many different ways to start a fire, review the hints and warnings in this section to ensure the fire is started properly.

90.1

8.2 DRAFT CONTROL

⚠ WARNING

ALWAYS OPERATE THIS APPLIANCE WITH THE DOOR CLOSED AND LATCHED EXCEPT DURING START-UP AND RE-FUELING.

Draft is the force which moves air from the appliance up through the chimney. The amount of draft in your chimney depends on the length of the chimney, local geography, nearby obstructions and other forces. Adjusting the draft control regulates the temperature. The draft can be adjusted from a low burn rate with the air control on the low setting to a fast burn rate with the air control on the high setting (far right position).

Inadequate draft may cause back-puffing into the room and may cause plugging of the chimney. Too much draft may cause an excessive temperature in the appliance, glowing red appliance parts or an uncontrollable burn which can all lead to a chimney fire or a permanent damage to the appliance.

<u>NOTE:</u> Remove all source of gasoline or other flammable vapours and liquids in the vicinity of this or other appliances prior to lighting.

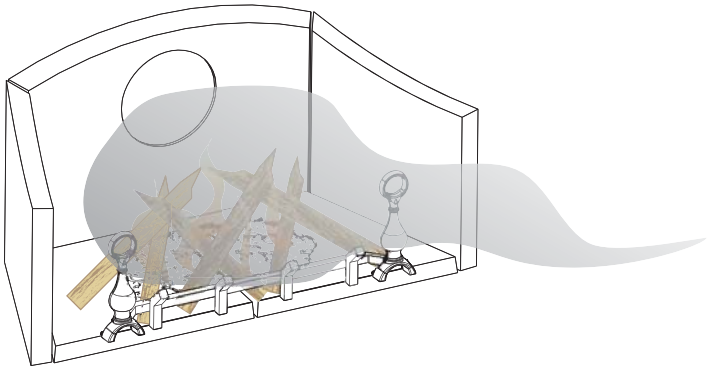

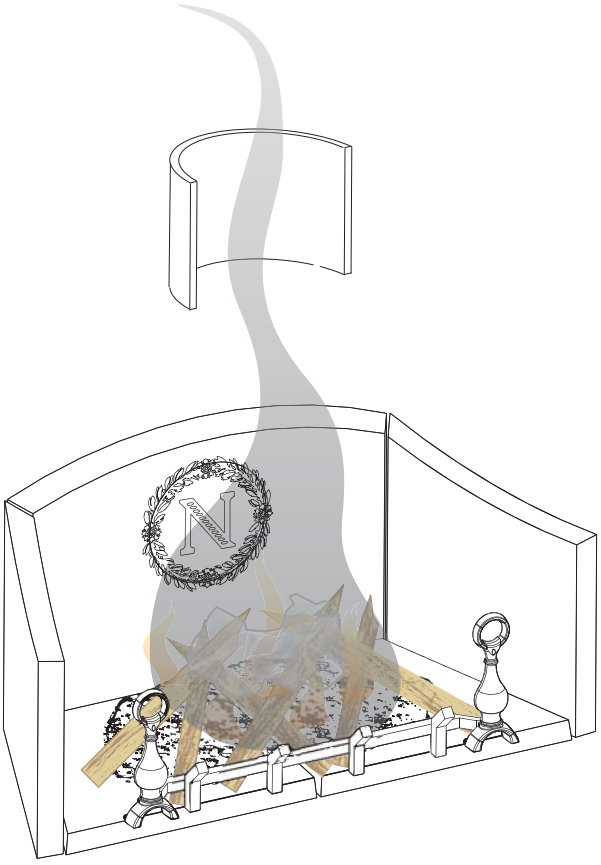

Roll up some newspaper, light it and place it near the appliance flue until the chimney begins to draw. When a fire is burning, open the door slowly to avoid drawing smoke into the room.

A properly installed Napoleon appliance should not smoke.

If yours does, check the following: Has the chimney had time to get hot? Are the air intake hoods blocked closed? Is the smoke passage blocked anywhere in the appliance or chimney? Is the smoke flow impeded by too long a horizontal pipe or too many bends? Is it a weak draft perhaps caused by a leaky chimney, a cold outside chimney, too short a chimney, or a chimney too close to trees or a higher roof?

8.3 FIRE EXTINGUISHERS AND SMOKE DETECTORS

All homes with a solid fuel burning appliance should have at least one fire extinguisher in a central location, known to all, and at least one smoke detector in the room containing the appliance. If it sounds an alarm, correct the cause but do not de-activate or relocate the smoke detector.

91.1

8.4 FUEL LOADING AND BURN CYCLE

⚠ WARNING

BURN WOOD BEHIND THE LOG RETAINER DIRECTLY ON THE FIREBRICKS.
DO NOT USE ELEVATED GRATE OR OTHERWISE RAISE THE FIRE.

DO NOT STORE WOOD WITHIN APPLIANCE INSTALLATION CLEARANCES OR WITHIN THE SPACE REQUIRED FOR RE-FUELING AND ASH REMOVAL.

The bricks will be nearly all white and the glass mostly clear. The whiteness of the bricks and the cleanness of the glass are good indicators of your operating efficiency.
Not enough heat is produced when only one or two pieces of wood are burned.
A minimum of three pieces are needed to encase a bed of coals that sustains the fire. Loosely stacked wood burns quicker than a tightly packed load.
Wood burns in cycles rather than giving a steady output of heat. It is best to plan these cycles around your household routine so that only enough coals are left to start the next load. In the evening load your appliance at least a half-hour before bed to ensure the fire is hot enough to close the draft control for an overnight burn.
Burn only dry seasoned wood. It produces more heat and less soot or creosote. Do not burn ocean beach wood. Its salt content can produce a metal eating acid.

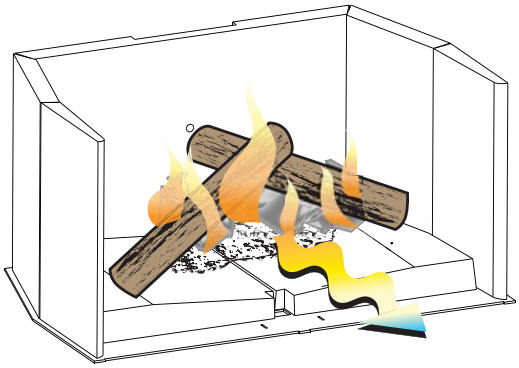

INSUFFICIENT FIREWOOD

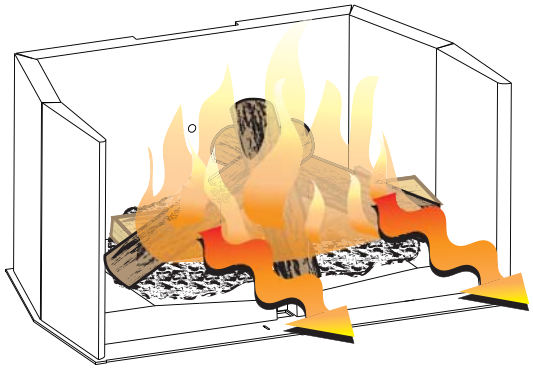

SUFFICIENT FIREWOOD

92.1

8.5 STARTING THE FIRE

⚠ WARNING

ALWAYS OPERATE THIS APPLIANCE WITH THE DOOR CLOSED AND LATCHED EXCEPT DURING START UP AND RE-FUELING OR WHEN USING THE SPARK SCREEN. ALWAYS WEAR GLOVES TO PREVENT INJURY. DO NOT LEAVE THE FIRE UNATTENDED WHEN THE DOOR IS UNLATCHED OR WHEN USING A SPARK SCREEN AS UNSTABLE WOOD COULD FALL OUT OF THE FIRE CHAMBER CREATING A FIRE HAZARD TO YOUR HOME.

NEVER LEAVE CHILDREN UNATTENDED WHEN THERE IS A FIRE BURNING IN THE APPLIANCE.

NEVER USE GASOLINE-TYPE LANTERN FUEL, KEROSENE, CHARCOAL LIGHTER FLUID, OR SIMILAR LIQUIDS TO START OR "FRESHEN UP" A FIRE IN THIS APPLIANCE. KEEP ALL SUCH LIQUIDS WELL AWAY FROM THE APPLIANCE.

THIS APPLIANCE HAS NOT BEEN TESTED WITH ANY VENTED OR UNVENTED GAS LOG SET. TO REDUCE RISK OF FIRE OR INJURY, DO NOT INSTALL A VENTED OR UNVENTED GAS LOG SET INTO THIS APPLIANCE.

BURNING YOUR APPLIANCE WITH THE DOORS OPEN OR AJAR CREATES A FIRE HAZARD THAT MAY RESULT IN A HOUSE AND OR CHIMNEY FIRE.

Make sure the air control lever is set to high. You may also open the doors 1" to 2" during the first five minutes of start-up, if additional air is needed see "COMBUSTION AIR" section.

Remove all source of gasoline or other flammable vapours and liquids in the vicinity of this or other appliances prior to lighting.

Use plenty of newspaper and kindling to ensure the appliance quickly reaches a proper temperature. Once the kindling is burning rapidly, place a few larger pieces of wood onto the fire.

Tip: When first lighting a fire, if the smoke is not quickly drawn into the chimney, there may be a downdraft or cold air in the chimney. By first burning large amounts of crumpled newspaper, the chimney will get heated and the smoke will quickly vent up the chimney.

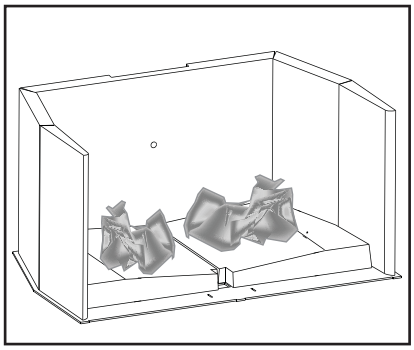

A. To start, a brisk fire is required. Roll up some newspaper (loosely crumpled), light it and place it near the appliance flue until the chimney begins to draw.

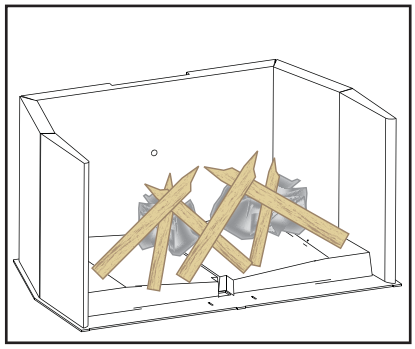

B. Cover with dry kindling.

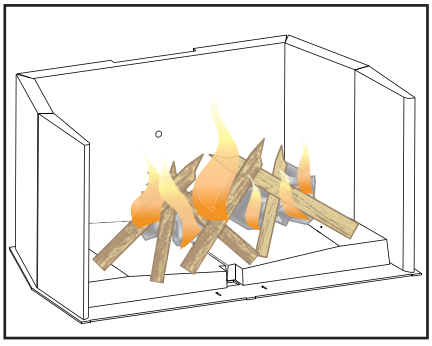

C. Fully open the draft control. See "**OPERATION**" section. Light the paper and leave the door slightly ajar (one to two inches) until all kindling is burning.

89.1A

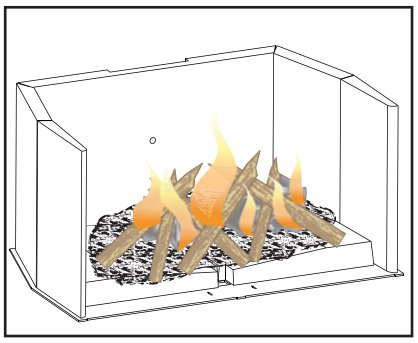

D. To maintain a brisk fire, a hot coal bed must be established and maintained.

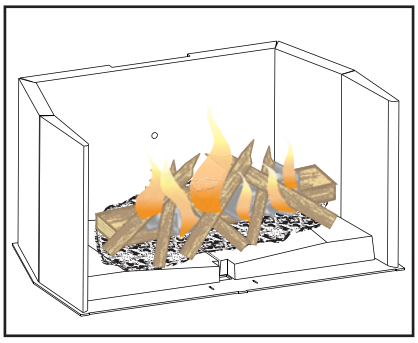

E. Slowly add larger wood (2x4 size pieces). Lay the pieces length wise from side to side in the hot coal bed with a shallow trench between, so that the primary air can flow directly into this trench and ignite the fuel above.

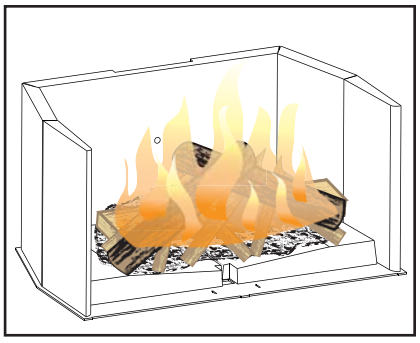

F. When the fire seems to be at its peak, medium sized logs may be added. Once these logs have caught fire, carefully close the doors.

When a fire is burning, open the doors slowly to avoid drawing smoke into the room. **Closing the doors too quickly after refuelling will reduce the firebox temperature and may result in an unsatisfactory burn.**

G. As soon as the doors are closed, you will observe a change in the flame pattern. The flames will get smaller and lazier because less oxygen is getting into the combustion chamber. The flames, however, are more efficient. The flames will remain lazy but become larger again as soon as the firebricks have been heated thoroughly and the chimney becomes heated and provides a good draft.

H. With the doors opened the fire is wastefully drawing heated room air up the chimney, certainly not desirable. Always operate with the doors fully closed once the medium sized logs have caught fire.

You can now add larger pieces of wood and operate the appliance normally. Once the appliance is entirely hot, it will burn very efficiently with little smoke from the chimney. There will be a bed of hot coals in the firebox so you can safely fill the firebox with wood to the top of the andirons.

Can't get the appliance operating? Use more kindling and paper. Assuming the chimney and vent are sized correctly and there is sufficient combustion air, the lack of sufficiently *dry* quantities of *small* kindling is the problem. *Thumb size* is a good gauge for small kindling diameter.

Can't get heat out of the appliance? One of two things may have happened. The appliance door may have been closed prematurely and the appliance itself has not reached optimum temperature. Re-open the door and/or draft control to re-establish a brisk fire. The other problem may have been wet wood. The typical symptom is sizzling wood and moisture being driven from the wood.

<u>NOTE:</u> Appliances surrounded by solid rock or brick, will experience a longer heat up period as those materials absorb the heat being generated.

OPERATING WITH DOOR CLOSED

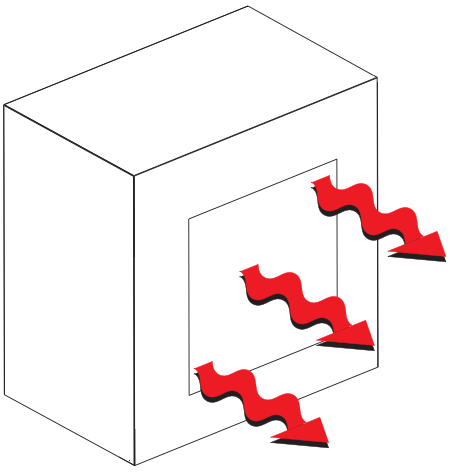

OPERATING WITH DOOR OPEN

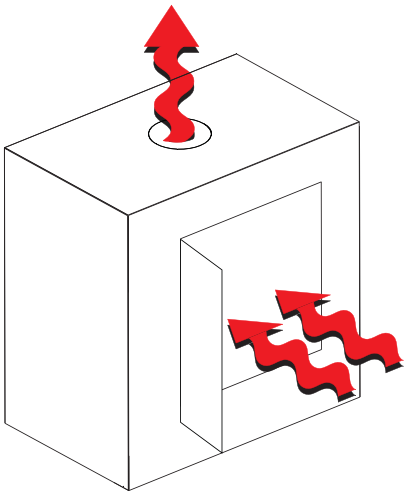

89.1_2

8.6 FLASH FIRES

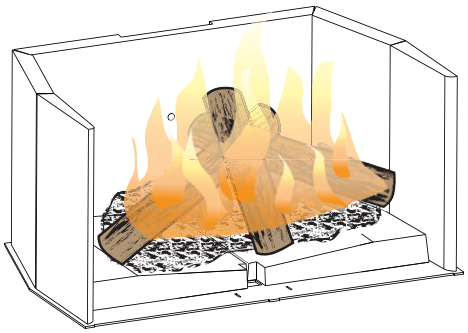

A flash fire is a small fire burned quickly when you don't need much heat. After your kindling has "caught", load at least 3 pieces of wood, stacked loosely. Burn with the draft control fully open or closed only slightly.

93.1

8.7 SMOKING

A properly installed appliance should not smoke. If yours does, check the following:

- Has the chimney had time to get hot?
- Is the smoke passage blocked anywhere in the appliance, chimney connector or chimney?
- Is the room too airtight and the air intake not connected to the outside? Try with a window partly open.
- Is the smoke flow impeded by too long a horizontal pipe or too many bends?
- Is it a weak draft perhaps caused by a leaky chimney, a cold outside chimney, too large a diameter of a chimney, too short a chimney, or a chimney too close to trees or a higher roof?

83.1

8.8 OVERNIGHT BURN

A. Get the appliance hot by moving the air control to high and letting the appliance burn for 15 minutes.

B. Load your larger pieces of wood compactly, packed close enough to prevent the flames from penetrating it completely.

C. After approximately 30 minutes, depending on the size of the load, reduce the draft control setting making sure that the fire is not extinguished.

D. In the morning the appliance should still be hot, with embers in the coal bed. Stir the coals and load small pieces of wood to re-ignite the fire, if desired.

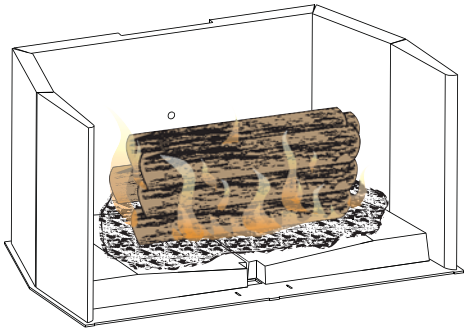

NOTE: Differences in chimney height and draft may lower overall burn times.
DO NOT OVERFIRE THE APPLIANCE! Overfiring can occur by burning large amounts of smaller wood pieces or vigorously burning large loads of wood with the draft control on "HIGH" (fully open) for long periods of time (one or two hours).

94.1

8.9 RELOADING THE APPLIANCE

⚠ WARNING

BURNING WET, UNSEASONED WOOD CAN CAUSE EXCESSIVE CREOSOTE ACCUMULATION, WHICH WHEN IGNITED CAN CAUSE A CHIMNEY FIRE THAT MAY RESULT IN A SERIOUS HOUSE FIRE.

When refuelling open the door slowly to prevent smoke spillage. Use a pair of long appliance gloves when feeding the fire. Keep a small steel shovel nearby to use as a poker and to remove ashes. Do not store wood within 4 feet (1m) of the appliance.
Follow the directions below to minimize smoke spillage while re-loading the appliance.

A. Move the air control to high.
B. Open the door slightly. Allow the airflow inside the firebox to stabilize before opening the doors fully.
C. Load wood to the top of the cast retainers and burn at a medium low setting.

95.1

9.0 MAINTENANCE

9.1 ASH REMOVAL PROCEDURES

⚠ WARNING

IMPROPER DISPOSAL OF ASHES RESULT IN FIRES. DO NOT DISCARD ASHES IN CARDBOARD BOXES, DUMP IN BACK YARDS, OR STORE IN GARAGES.

IF USING A VACUUM TO CLEAN UP ASHES, BE SURE THE ASHES ARE ENTIRELY COOLED. USING A VACUUM TO CLEAN UP WARM ASHES COULD CAUSE A FIRE INSIDE THE VACUUM.

A bed of ashes approximately 1" deep should be left on the firebox bottom to help maintain a hot charcoal bed. When the fire has burned down and cooled, remove any excess ashes. To remove the ash, follow the directions below.

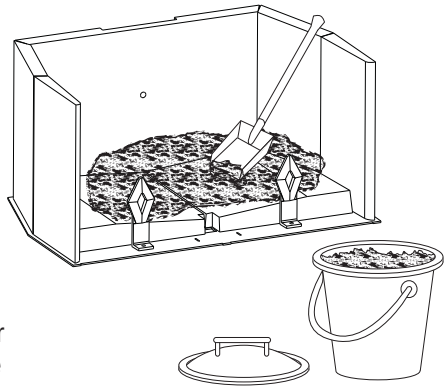

A. After the last coal has extinguished, let the appliance cool at least two hours.

B. Open the appliance doors.

C. Scoop the ash from the firebox into a metal, airtight, container with a lid. Cover the container with the lid and move the container away from the appliance onto a suitable non-combustible surface to ensure the ashes cool. Dispose of the ashes.

9.2 CREOSOTE FORMATION AND REMOVAL

When wood is burned slowly, it produces tar and other organic vapours which combine with expelled moisture to form creosote. These vapours condense in the relatively cooler chimney flue of a slow burning fire and when ignited, make an extremely hot fire. So, the smoke pipe/chimney liner and chimney should be inspected monthly during the heating season to determine if a buildup has occurred. If creosote has accumulated it should be removed to reduce the risk of a chimney fire.

9.3 RUN-AWAY OR CHIMNEY FIRE

⚠WARNING

A CHIMNEY FIRE CAN PERMANENTLY DAMAGE YOUR CHIMNEY SYSTEM. THIS DAMAGE CAN ONLY BE REPAIRED BY REPLACING THE DAMAGED COMPONENT PARTS. CHIMNEY FIRES ARE NOT COVERED BY THE LIFETIME LIMITED WARRANTY.

CAUSES:

- Using incorrect fuel, or small fuel pieces which would normally be used as kindling.
- Leaving the door ajar too long and creating extreme temperatures as the air rushes in the open door.
- Improperly installed or worn gaskets.
- Creosote build up in chimney.

SOLUTIONS:

- Do not burn treated or processed wood, coal, charcoal, coloured paper or cardboard.
- Be careful not to overfire the appliance by leaving the door open too long after the initial start-up. A thermometer on the chimney connector and/or appliance top helps.
- Replace worn, dried out (inflexible) gaskets.
- Have chimney regularly cleaned.

IN CASE OF A CHIMNEY FIRE:

- Have a well understood plan for evacuation and a place outside for everyone to meet. Prepare to evacuate to ensure everyone's safety.
- Close air control on appliance.
- Call local fire department. Have a fire extinguisher handy. Contact local authorities for further information on how to handle a chimney fire.
- After the chimney fire is out, clean and inspect the chimney or chimney liner for stress and cracks prior to lighting another fire. Also check combustibles around the chimney and the roof.

85.2

9.4 CHIMNEY CLEANING

Both the chimney and the appliance must be inspected and cleaned if necessary at least once a year. For serious wood burners, chimney cleaning must be done as needed to avoid chimney fires; the venting systems for controlled combustion appliances may need cleaning as often as once a month. These rates, however, depend on the burning habits of the individual operating the appliance. For example, it is possible to clog a solid fuel appliance chimney in a few days if slow, smoldering fires are burned and the chimney is cold. **NOTE: Appliances burned consistently without hot fires may result in significant creosote accumulations in the chimney.**

Certain items and considerations are important in chimney cleaning:

- Proper tools should be used, including a brush specifically designed for chimney cleaning.
- The chimney connector and dampers as well as the chimney should be cleaned.
- The appliance's firebox and baffle system should be cleaned if needed.
- The chimney should be inspected and repairs made if needed, preferably by a qualified chimney sweep or mason.

86.1

9.5 GLASS AND GASKET REPLACEMENT

⚠WARNING

MAKE SURE THAT THE GLASS AND GASKET ARE FULLY INSTALLED DOWN INTO THE GLASS RETAINER. IF THE GLASS PROTRUDES TOO FAR OUT OF THE RETAINER, THE GLASS WILL SHATTER WHEN THE DOOR IS CLOSED.

At the end of each burning season inspect the door gasket ensuring that it is not worn or loose. Replace with proper fiberglass rope. The purpose of door gasketing is to seal the firebox. If the doors are not sealed, air leaks into the firebox, creating a quick burning fire. This situation is not desirable for overnight or extended burns.

Replace cracked or broken glass immediately. When re-installing the glass, be sure that the glass and gasket create a solid seal around door frame. Follow the instructions below for glass removal. You may require a flat tool to gently press the gasket between the glass and the door.

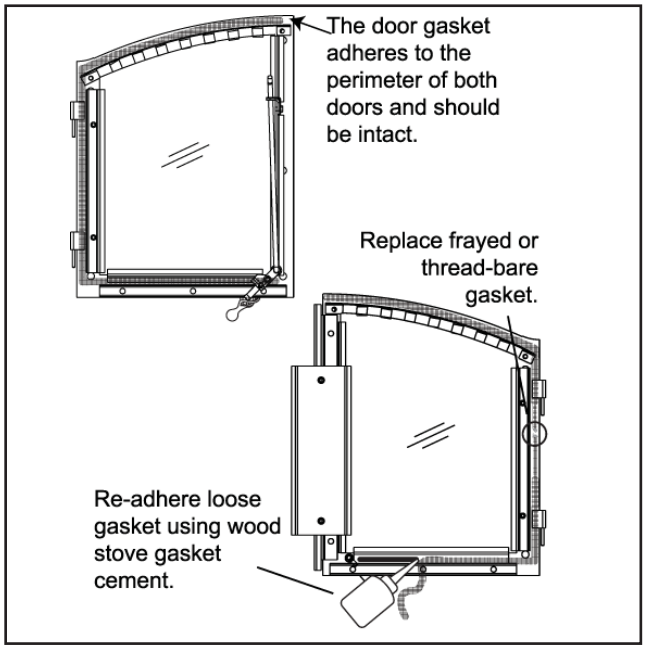

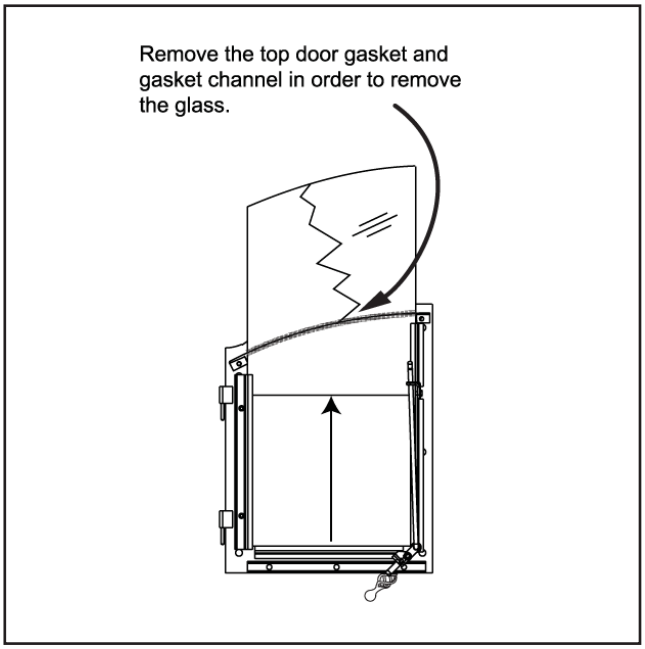

9.6 CARE OF GLASS

If the glass is not kept clean permanent discolouration and / or blemishes may result. Normally a hot fire will clean the glass. The most common reasons for dirty glass include: not using sufficient fuel to get the appliance thoroughly hot, using green or wet wood, closing the draft so far that there is insufficient air for complete combustion.
If it is necessary to clean the glass, buff lightly with a clean dry cloth and non-abrasive cleaner.

⚠WARNING

HOT GLASS WILL CAUSE BURNS.

DO NOT TOUCH GLASS UNTIL COOLED.

NEVER ALLOW CHILDREN TO TOUCH GLASS.

DO NOT CLEAN GLASS WHEN HOT! Clean the glass after the first 10 hours of operation with a recommended appliance glass cleaner. Thereafter clean as required.

The glass is very strong but do not let burning fuel rest or fall against it and always close the door gently. **NEVER FORCE IT SHUT!**

If the glass should ever crack or break while the fire is burning, do not open the door until the fire is out and do not operate the appliance again until the glass has been replaced, available from your Authorized dealer. **DO NOT SUBSTITUTE MATERIALS.**

9.7 NZ64 BLOWER REPLACEMENT

A. Remove the grill and filter by removing the 2 securing screws.

B. Remove the nut securing the blower bracket to the housing.

C. Lift the handles to pull the blower and bracket off of the stud.

D. Slide the bracket and blower out of the housing.

E. Disconnect the wire connector from the blower.

F. Remove the old blower from the bracket by removing the four screws.

G. Secure the new blower to the existing bracket using the four screws.

H. Slide the new blower/bracket assembly into the housing. Ensure that the blower bracket slides into the clips at the back of the housing on either side.

I. Push the assembly into the housing as far in as possible.

J. Secure the assembly to the housing using the nut removed in step B.

K. Re-secure the grill by replacing the 2 securing screws.

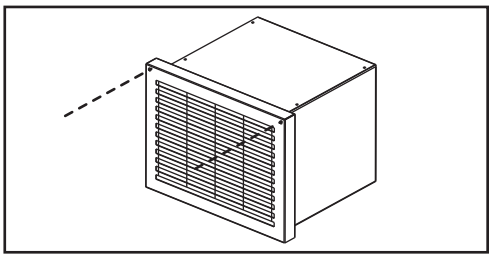

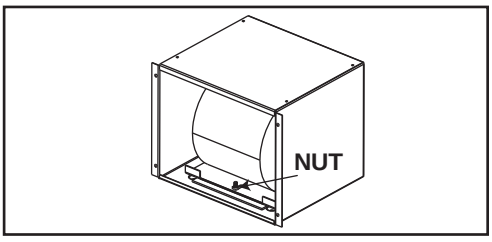

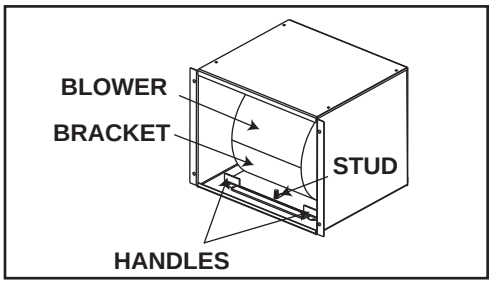

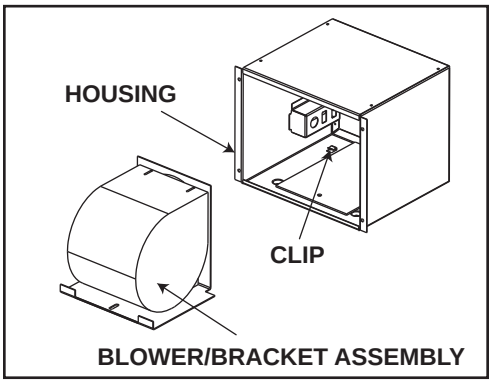

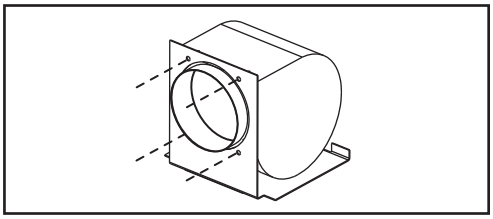

10.0 REPLACEMENTS

Contact your dealer or the factory for questions concerning prices and policies on replacement parts. Normally all parts can be ordered through your Authorized dealer / distributor.

FOR WARRANTY REPLACEMENT PARTS, A PHOTOCOPY OF THE ORIGINAL INVOICE WILL BE REQUIRED TO HONOUR THE CLAIM.

When ordering replacement parts always give the following information:

- Model & Serial Number of appliance
- Installation date of appliance
- Part number
- Description of part
- Finish

WARNING

FAILURE TO POSITION THE PARTS IN ACCORDANCE WITH THIS MANUAL OR FAILURE TO USE ONLY PARTS SPECIFICALLY APPROVED WITH THIS APPLIANCE MAY RESULT IN PROPERTY DAMAGE OR PERSONAL INJURY.

*** IDENTIFIES ITEMS WHICH ARE NOT ILLUSTRATED. FOR FURTHER INFORMATION, CONTACT YOUR AUTHORIZED DEALER.**

41.1

APPLIANCE AND ACCESSORY REPLACEMENT PARTS		
REF	**PART NO.**	**DESCRIPTION**
1	W300-0069	DOOR GLASS
2*	W562-0035	DOOR OR GLASS GASKET
3*	W010-1225	GLASS & GASKET
4	W090-0099	REAR FIREBRICK
5	W090-0101	BOTTOM RIGHT FIREBRICK
6	W090-0100	BOTTOM LEFT FIREBRICK
7	W090-0098	RIGHT SIDE FIREBRICK
8	W090-0097	LEFT SIDE FIREBRICK
9	W010-1399	BAFFLE
10*	W660-0065	HEAT SENSOR
11*	W200-0141	PRIMARY AIR PLATE
12*	W555-0047	PRIMARY AIR ROD
13	W380-0017	PRIMARY AIR KNOB
14	W010-1193	PRIMARY AIR ACCESS COVER
15	W010-1180	ASH LIP ASSEMBLY
16	W715-0628	ANDIRONS
17	W185-0020	GRATE
18*	W385-0334	NAPOLEON LOGO
19*	W410-0026	10" x 6" AIR SUPPLY VENT
20	W010-1594	SECONDARY AIR TUBE
21	W290-0121	GASKET, SECONDARY AIR TUBE
22*	W450-0028	NUT, HEX BRASS

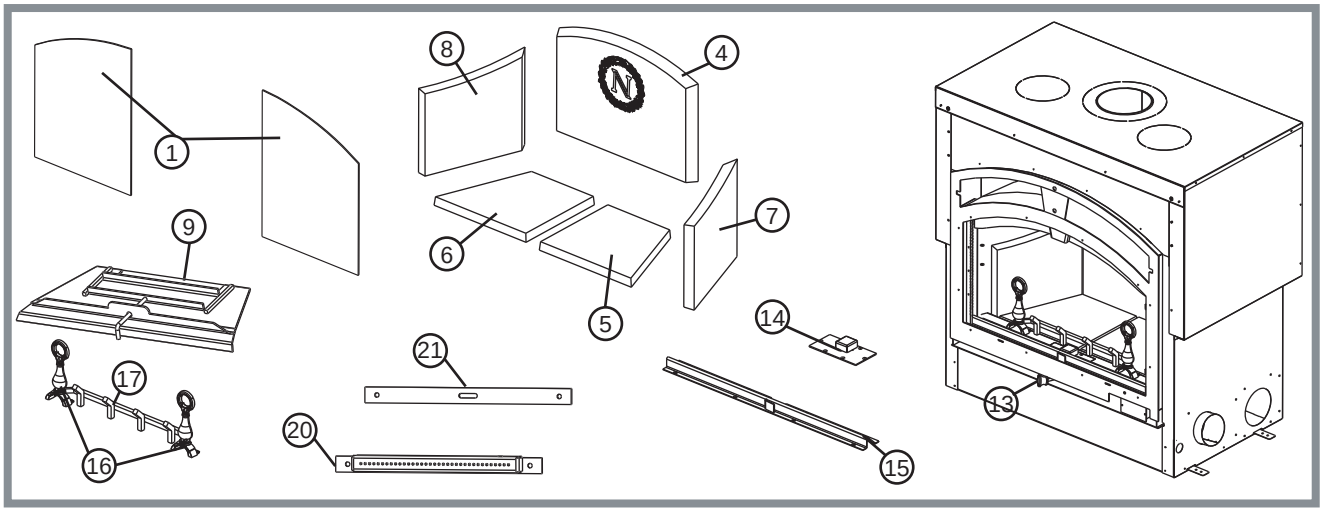

ACCESSORIES		
REF	**PART NO.**	**DESCRIPTION**
23	H335-K	ARCHED DOORS - BLACK
23	H335-SCB	ARCHED DOORS - SATIN CHROME BEVELLED
23	H335-WI	ARCHED DOORS - WROUGHT IRON
24	FPK	FACEPLATE ARCHED - BLACK
24	FPSC	FACEPLATE ARCHED - SATIN CHROME
24	FPWI	FACEPLATE ARCHED - WROUGHT IRON
25	UGK	UPPER GRILL ARCHED - BLACK
25	UGG	UPPER GRILL ARCHED - GOLD PLATED
25	UGSC	UPPER GRILL ARCHED - SATIN CHROME
26	KSK	KEYSTONE - BLACK
26	KSG	KEYSTONE - GOLD PLATED
26	KSSC	KEYSTONE - SATIN CHROME
27	NSK6	ARCHED SCREEN KIT
28	CP	CRANE AND POT
29*	NZ221	GRAVITY HOT AIR VENT KIT
30	NM228-M	FLUE TILE SUPPORT
31*	NZAC-KT	AIR COOLED CHIMNEY KIT
32*	NZ64	BLOWER KIT
33*	W250-0005	BLOWER FILTER
34	W305-0007	BLOWER GRILL
35*	NZ150-KT	CIRCULATION AIR MOUNTING KIT
36*	W690-0005	120V THERMOSTAT
37*	W175-0002	8" COUPLER
38*	NZ220-2	5" x 5" DIA. AIR VENT (FOR GRAVITY HOT AIR VENT)
39*	NZ620-KT	6" x 10' OUTSIDE COMBUSTION AIR EXTENSION KIT, INCLUDES COUPLER AND HARDWARE
40*	W010-0067	VENT SUPPORT BRACKET (FOR CENTRAL HEATING SYSTEM)
41*	270	THURMALOX PAINT
42*	W470-0017	WROUGHT IRON PAINT
43	W062-0018	BLOWER - NZ64
44*	KB35	VARIABLE SPEED CONTROL - INCL KNOB
45	W010-1184	LEFT DOOR ASSEMBLY
46	W010-1183	RIGHT DOOR ASSEMBLY
47	W325-0029	DOOR HANDLE - BIRD CAGE
48*	W410-0005	10" x 8" DIA. AIR VENT (FOR CENTRAL HEATING SYSTEM)

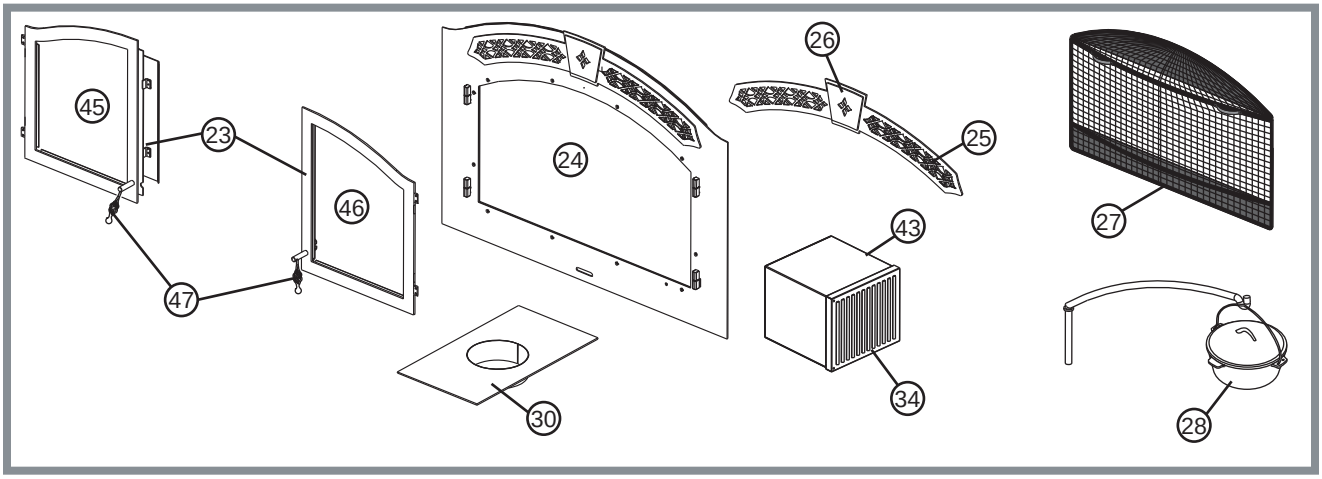

11.0 TROUBLE SHOOTING GUIDE

SYMPTOM	PROBLEM		TEST SOLUTION
Smoke enters the room during start-up.	Cold air blockage in chimney.	-	Burn a piece of newspaper to establish a draft.
	Close the doors.	-	If the flame is not getting enough air, first make sure the air control is open. If additional air is needed, open the doors a small crack only.
Kindling does not start - fire smolders.	Cold air blockage in chimney.	-	Burn a piece of newspaper to establish a draft.
	Not enough starter paper.	-	Use additional newspaper if necessary.
	Not enough air.	-	First make sure the air control is fully open. If additional air is needed, a small crack in the doors is all that is needed.
Smoke enters the room while re-loading.	Insufficient draft.	-	Chimney height and outside conditions can negatively affect draft. In these cases a small amount of smoke may enter the home. Adding more pipe or a draft-inducing cap may help.
		-	Clean chimney
Appliance does not burn hot enough.	Wood is wet.	-	See the section on “Selecting Wood” for details.
	Insufficient draft.	-	Chimney height and outside conditions can negatively affect draft. In these cases a small amount of smoke may enter the home. Adding more pipe or a draft-inducing cap may help.
		-	Clean chimney.
	Air control is not wide open.	-	Make sure the air control is open all the way. Slide the control back and forth rapidly to insure the control is not stuck.
Blower does not run.	Appliance is not up to temperature.	-	This is normal. The blower will come on when the appliance is heated up enough to heat the room.
	Electricity is cut to the blower.	-	Check the household breaker or fuse to make sure it is operable.
	Door is ajar.	-	Appliance door must be closed for blower to operate.
Faceplate is cold.	This is normal.	-	The air leading into the firebox could come from the exterior. In these cases this air comes into the firebox and exits the chimney. This will not damage the appliance.
Appliance does not burn overnight.	The doors are not sealing.	-	See the section “Door Glass / Gasket Replacement” for details.
Appliance smoking. 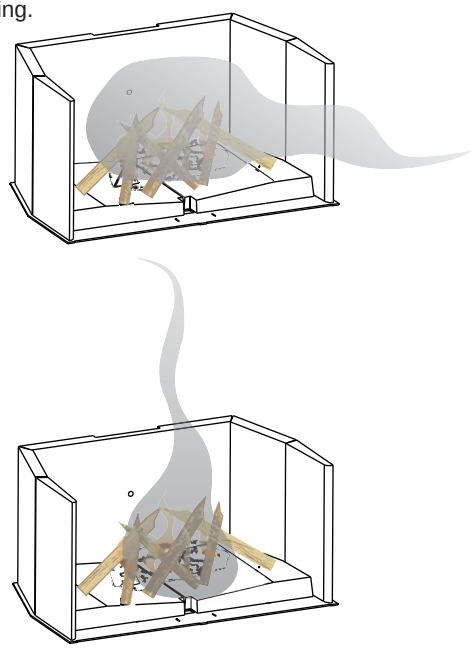		-	Has the chimney had time to get hot?
		-	Is there adequate supply of combustion air?
		-	Is the outside air damper opened?
		-	Is the smoke passage blocked anywhere in the appliance or chimney?
		-	Is the smoke flow impeded by too long of a horizontal pipe or too many bends?
		-	Is it a weak draft perhaps caused by a leaky chimney, a cold outside chimney, too short a chimney, or a chimney too close to a tree or a higher roof?

12.0 WARRANTY

NAPOLEON® products are manufactured under the strict Standard of the world recognized ISO 9001 : 2008 Quality Assurance Certificate.

NAPOLEON® products are designed with superior components and materials, assembled by trained craftsmen who take great pride in their work. The complete appliance is again thoroughly inspected by a qualified technician before packaging to ensure that you, the customer, receives the quality product that you expect from NAPOLEON®.

NAPOLEON® WOOD APPLIANCE PRESIDENT'S LIFETIME LIMITED WARRANTY

The following materials and workmanship in your new NAPOLEON® wood appliance are warranted against defects for as long as you own the appliance. This covers: combustion chamber, heat exchanger, ceramic glass (thermal breakage only), gold plated parts against tarnishing, porcelainized enameled components, aluminum extrusion trims, vortex baffles, ash drawer and iron castings.

Electrical (110V) components and wearable parts such as blowers, thermal switch, switches, wiring, firebrick, stainless steel baffle retainer, secondary air tubes, and gasketing are covered and NAPOLEON® will provide replacement parts free of charge during the first year of the limited warranty. *

Labour related to warranty repair is covered free of charge during the first year. Repair work, however, requires the prior approval of an authorized company official. Labour costs to the account of NAPOLEON® are based on a predetermined rate schedule and any repair work must be done through an authorized NAPOLEON® dealer.
Parts such as firebricks and baffles should routinely be removed by the operator as part of the regular service and therefore, any warranty replacement of these parts does not qualify for any labour allowances.
* Construction of models vary. Warranty applies only to components included with your specific appliance.

CONDITIONS AND LIMITATIONS

NAPOLEON® warrants its products against manufacturing defects to the original purchaser only. Registering your warranty is not necessary. Simply provide your proof of purchase along with the model and serial number to make a warranty claim. Provided that the purchase was made through an authorized NAPOLEON® dealer your appliance is subject to the following conditions and limitations:
Warranty coverage begins on the date of original installation.
This factory warranty is non-transferable and may not be extended whatsoever by any of our representatives.
The wood appliance must be installed by an authorized service technician or contractor. Installation must be done in accordance with the installation instructions included with the product and all local and national building and fire codes.
This limited warranty does not cover damages caused by misuse, lack of maintenance, accident, alterations, abuse or neglect and parts installed from other manufacturers will nullify this warranty.
This limited warranty further does not cover any scratches, dents, corrosion or discoloring caused by excessive heat, abrasive and chemical cleaners nor chipping on porcelain enamel parts, nor any venting components used in the installation of the appliance.
This warranty extends to the repair or replacement of warranted parts which are defective in material or workmanship provided that the product has been operated in accordance with the operation instructions and under normal conditions.
After the first year, with respect to the President's Lifetime Limited Warranty, NAPOLEON® may, at its discretion, fully discharge all obligations with respect to this warranty by refunding to the original warranted purchaser the wholesale price of any warranted but defective part(s).
After the first year, NAPOLEON® will not be responsible for installation, labour or any other costs or expenses related to the reinstallation of a warranted part, and such expenses are not covered by this warranty.
Notwithstanding any provisions contained in the President's Lifetime Limited Warranty, NAPOLEON's responsibility under this warranty is defined as above and it shall not in any event extend to any incidental, consequential or indirect damages.
This warranty defines the obligations and liability of NAPOLEON® with respect to the NAPOLEON® wood appliance and any other warranties expressed or implied with respect to this product, its components or accessories are excluded.
NAPOLEON® neither assumes, nor authorizes any third party to assume, on its behalf, any other liabilities with respect to the sale of this product.
NAPOLEON® will not be responsible for: over-firing, downdrafts, spillage caused by environmental conditions such as rooftops, buildings, nearby trees, hills, mountains, inadequate vents or ventilation, excessive venting configurations, insufficient makeup air, or negative air pressures which may or may not be caused by mechanical systems such as exhaust fans, furnaces, clothes dryers, etc.
Any damages to appliance, combustion chamber, heat exchanger, plated trim or other component due to water, weather damage, long periods of dampness, condensation, damaging chemicals or cleaners will not be the responsibility of NAPOLEON®.
NAPOLEON® reserves the right to have its representative inspect any product or part thereof prior to honouring any warranty claim.
All parts replaced under the President's Limited Lifetime Warranty Policy are subject to a single claim.
During the first 10 years NAPOLEON® will replace or repair the defective parts covered by the lifetime warranty at our discretion free of charge. From 10 years to life, NAPOLEON® will provide replacement parts at 50% of the current retail price.
All parts replaced under the warranty will be covered for a period of 90 days from the date of their installation.
The manufacturer may require that defective parts or products be returned or that digital pictures be provided to support the claim. Returned products are to be shipped prepaid to the manufacturer for investigation. If a product is found to be defective, the manufacturer will repair or replace such defect.
Before shipping your appliance or defective components, your dealer must obtain an authorization number. Any merchandise shipped without authorization will be refused and returned to sender.
Shipping costs are not covered under this warranty.
Additional service fees may apply if you are seeking warranty service from a dealer.
Warranty labour allowance is only for the replacement of the warranted part. Travel, diagnostic tests, shipping and other related charges are not covered by this warranty.

ALL SPECIFICATIONS AND DESIGNS ARE SUBJECT TO CHANGE WITHOUT PRIOR NOTICE DUE TO ON-GOING PRODUCT IMPROVEMENTS. NAPOLEON® IS A REGISTERED TRADEMARK OF WOLF STEEL LTD.

2.2B

13.0 SERVICE HISTORY

Appliance Service History

This heater must be serviced annually depending on usage.

Date	Dealer Name	Service Technician Name	Service Performed	Special Concerns

43.1

13.0 NOTES

44.1

NAPOLEON®
QUALITY FIREPLACES

Other products available from your Authorized Napoleon® Fireplace Dealer...

Patio Heaters

Fireplace Mantels

HVAC Products

Electric Fireplaces

Outdoor Living Products

Fireplace Accessories

Contact your Authorized Napoleon® dealer or visit napoleonfireplaces.com for more information.